# EMC® VNX™ VNX5300™ Unified

## Installation Guide

P/N 300-012-925
REV 05

EMC²

Copyright © 2012 EMC Corporation. All rights reserved. Published in the USA.

Published October, 2012

EMC believes the information in this publication is accurate as of its publication date. The information is subject to change without notice.

The information in this publication is provided as is. EMC Corporation makes no representations or warranties of any kind with respect to the information in this publication, and specifically disclaims implied warranties of merchantability or fitness for a particular purpose. Use, copying, and distribution of any EMC software described in this publication requires an applicable software license.

EMC$^2$, EMC, and the EMC logo are registered trademarks or trademarks of EMC Corporation in the United States and other countries. All other trademarks used herein are the property of their respective owners.

For the most up-to-date regulatory document for your product line, go to EMC Online Support (https://support.emc.com).

This space is for the label on the front of Control Station 0 and Control Station 1.

# CONTENTS


## Introduction

Audience ..... 5
Shipping Methods ..... 5
Overview of installing in an EMC cabinet ..... 5
Overview of installing in a customer cabinet ..... 6

## Prepare your system

Before you begin ..... 7
Site requirements ..... 8

## Unpack your system

Unpacking the shipping boxes ..... 9
Removing mini-rack components ..... 11

## Assemble components in your cabinet

Installing rails ..... 15
Installing components ..... 16
Installing the standby power supply ..... 18
Installing disk processor enclosure ..... 19
Installing Control Stations and extension cables ..... 22
Installing blade enclosure 0 ..... 24

## Cable your system

Cabling Control Station, modem, and public LAN ..... 25
Cabling CS0 ..... 25
Cabling CS1 (optional) ..... 28
Cable storage processors and blades ..... 31
Cabling storage processor A (SP A) ..... 31
Cabling storage processor B (SP B) ..... 33
Cabling SPs to the blade management modules ..... 35
Cabling for one blade enclosure ..... 35
Cabling the standby power supply to SP serial port ..... 36

## Power up

Before you power up ..... 37
Connecting or verifying power cables ..... 37
Verifying system status ..... 39

## Add additional storage

Disk-array enclosure types ..... 43
Assembling the DAEs ..... 44
Install the DAE rails ..... 45
Install the DAE ..... 47
Connect SAS DPE and DAE cables ..... 48

Power up the DAE ..... 50
Verify DAE status ..... 51
Verify 3U, 15 3.5'' drive DAE status ..... 51
Verify 2U, 2.5'' drive DAE status ..... 52

## Set up

Connect a management station ..... 53
Initialize your storage system ..... 53
Downloading ESRS documentation ..... 54
Downloading ESRS IP Client ..... 54
Update the storage system software and register your system ..... 54
Downloading USM documentation ..... 55
Downloading Unisphere Service Manager ..... 55
Downloading the latest the VNX operating environment software ..... 55
Registering your system with your service provider ..... 55
Check system health ..... 55
Configure servers for VNX systems ..... 56
Attach bezels ..... 56

## Planning Worksheets

VNX File configuration worksheet ..... 59
ESRS worksheet ..... 62

# Introduction

## Audience

Although your VNX system is customer installable, EMC recommends that the installation be performed by someone who has a general background in information technology. While prior training is not required, customers who successfully installed this product were trained as either:

- EMC Proven Professionals
- Microsoft Certified Technology Specialists
- Cisco Certified Network Associates
- CompTIA A+ certified technicians

Your service provider offers a variety of installation and implementation services designed to assist you in putting your VNX system into production as quickly and efficiently as possible. Contact your sales representative to take advantage of these service offerings.

# Shipping Methods

There are two ways in which the product is packed and shipped to you. It will be shipped completely-installed and cabled in an EMC cabinet or it will be shipped in multiple boxes for installation into a customer-provided cabinet.

## Overview of installing in an EMC cabinet

If your system was shipped in an EMC cabinet, the installation process involves the following steps:

1. Read and complete the prerequisite tasks as described in "Before you begin" on page 7.
2. Unpack the shipping boxes and verify the shipping contents from the packing instructions on the outside of the box as described in "Unpack your system" on page 9.
3. Verify cabling and connect the system to your network as described in "Cable your system" on page 25.
4. Power up your system and verify that the system powered up correctly by checking the LEDs of the Control Stations, blade enclosures, storage processors, standby power supply, and disk-array enclosures as described in "Power up" on page 37.
5. Complete the tasks listed in "Set up" on page 53.

## Overview of installing in a customer cabinet

If your system was shipped in a mini-rack:

1. Read and complete the prerequisite tasks listed in "Before you begin" on page 7.
2. Unpack the shipping boxes and verify the shipping contents as described in "Unpack your system" on page 9.
3. Remove the mini-rack contents as described in "Removing mini-rack components" on page 11.
4. Assemble the components as described in "Assemble components in your cabinet" on page 15 in your cabinet by first installing the rails and then installing each system component.
5. Cable your system as described in "Cable your system" on page 25.
6. Power up your system by connecting power cables, and then verify that the system powered up correctly by checking the LEDs of the components as described in "Power up" on page 37.
7. Optionally, you can add a disk-array enclosure (DAE), power it up, and then verify that the DAE was powered up correctly by checking the DAE LED status as described in "Add additional storage" on page 43.
8. Complete the tasks listed in "Set up" on page 53.

# Prepare your system

Use the Before you begin checklist to help you determine what you need to install for your system.

## Before you begin

**Table 1** Before you begin checklist

| Complete | Task | Comments |
|---|---|---|
| ❑ | 1. Set up product support account. | If you do not already have a Product Support account, go to https://Support.EMC.com to set one up immediately.<br>You will need a support account for access to the latest documentation and troubleshooting information, online chat, installation and maintenance videos, utilities and wizards. |
| ❑ | 2. Complete the VNX Unified Planning worksheets. | The worksheets are provided at the end of the document. To download additional worksheets:<br>• Go to https://Support.EMC.com and search for **VNX Unified Planning Worksheets**. |
| ❑ | 3. Prepare site | For resource requirements, go to Table 2 on page 8. |
| ❑ | 4. Download additional VNX installation documentation (when appropriate). | EMC provides additional documentation for installation of certain VNX systems, including:<br>• DC-power (Telco) systems<br>• NEBS systems<br>• Dense-rack systems<br>To download this documentation:<br>Go to https://Support.EMC.com. Select **VNX Series** › **Documentation**. |
| ❑ | 5. Download VNX documentation (optional) | • If you are unfamiliar with the VNX system architecture, download and review the *VNX5300 Hardware Information Guide* before you begin the installation.<br>Go to https://Support.EMC.com. Select **VNX Series** › **Documentation** › **VNX5300** › **Manuals and Guides** › **VNX5300 Hardware Information Guide**.<br>• If you want to generate documentation specific for your system configuration to configure servers, update software, or add and replace hardware, go to https://mydocs.emc.com. |

# Site requirements

**Table 2** Resource requirements

| Resource | Requirement |
|---|---|
| Power | AC: For high availability, at least two 110 or 240 V AC circuits are required.<br>or<br>DC: See the requirements in *DC-Powered VNX Series Enclosures Installation and Operation Guide.* |
| Network | One or two 1-Gigabit Ethernet management connections (depending on 1 or 2 Control Stations) and two customer-supplied CAT5e or better cables. |
| Space | Cabinet vertical space:<br>• 3U for disk processor enclosure (DPE)<br>• 1U for the standby power supply (SPS)<br>• 1U for each Control Station (CS)<br>• 2U for each blade enclosure (BE)<br>• For each optional DAE, either 2U or 3U |
| Tools | Slotted- or Phillips-head screwdriver |
| Management Station | A Windows-based computer to run the initialization, maintenance, and management tools with:<br>• Minimum screen resolution of 1280 x 800<br>• At least 500 MB of free space<br>• Connection on same LAN subnet as your VNX5300 system<br>• DNS/NTP server network connection to the VNX5300 and the management host<br>• Windows Domain Controller recommended<br>• SMTP server network connection to the VNX5300 and the management host<br>• JRE*<br>• Browser * (Internet Explorer or Mozilla Firefox)<br>*Supported versions are listed in the release notes. |
| Network information | The management port and login information in the Planning Worksheets of this install guide. This information includes:<br>• A static IP address for each storage processor in the system (for example, http://123.45.6.7)<br>• The IPv6 global prefix and gateway for each SP if your network supports the IPv6 Internet Protocol and you want to manually configure IPv6 for the management ports<br>• The subnet mask of the LAN to which the system is connected<br>• The default gateway address of the LAN to which the system is connected |

# Unpack your system

## Unpacking the shipping boxes

You might have received your system already racked and cabled in an EMC cabinet or in a mini-rack to be unpacked and installed into your own cabinet.

If your system was shipped fully assembled and cabled in an EMC cabinet:

1. Follow the unpacking instructions on the outside of the box.
2. Skip all sections up to "Cable your system" on page 25 of this installation guide. In "Cable your system" on page 25 verify your cabling.

If your system was shipped in a mini rack:

1. Verify that you have received all of the system's components, including cables and bezels. Table 3 lists the shipping contents.

**Table 3** Example shipping contents

| | Components | Accessories |
|---|---|---|
| ❑ | One blade enclosure | • Mounting screws<br>• Bezel and bezel key<br>• Management cables<br>• Power cables<br>• Fibre cables |
| ❑ | One or two Control Stations (CSs) | • Mounting screws<br>• Bezels and bezel keys<br>• Extension cables<br>• IPMI cable<br>**Note:** IPMI cable is only available with a second CS.<br>• Management cable<br>• Power cable |
| ❑ | Disk processor enclosure (DPE) | • Mounting screws<br>• Bezel and bezel keys<br>• Power cable |
| ❑ | Standby power supply (SPS) | • Mounting screws<br>• Bezel<br>• Management cable<br>• Power cable |

**Table 3** Example shipping contents (continued)

| | Components | Accessories |
|---|---|---|
| ❑ | Cable label kit | Cable labels for SAS cables to DAEs |
| ❑ | Ganged rails | All the ganged rails from the mini-rack |
| ❑ | Documentation | Documentation kit, including<br>• This installation guide<br>• Environmental compliance information and notices<br>• Right-to-Use (RTU) notices, as appropriate to the system |

For damaged or missing components, notify your Sales associate immediately for replacements.

2. Start the unpacking and assembling process with "Removing mini-rack components" on page 11.

**Note:** Ensure that you have the latest version of the install guide and any other associated documentation. To download the most recent version of the installation guide, go to https://mydocs.emc.com/VNX/ and select **Install VNX**.

# Removing mini-rack components

To remove the mini-rack components:

1. Remove the Control Station information label from the front of CS0 and attach it to the inside cover of this manual. If you have a second optional Control Station (CS1), remove this Control Station information label and attach it to the inside cover of this manual.
2. Remove only the screws (colored yellow in Figure 1) holding the components in the mini-rack. The yellow colored arrows in Figure 1 point you to which screws to remove.
3. Retain these removed screws for later assembly of the components into a site rack.

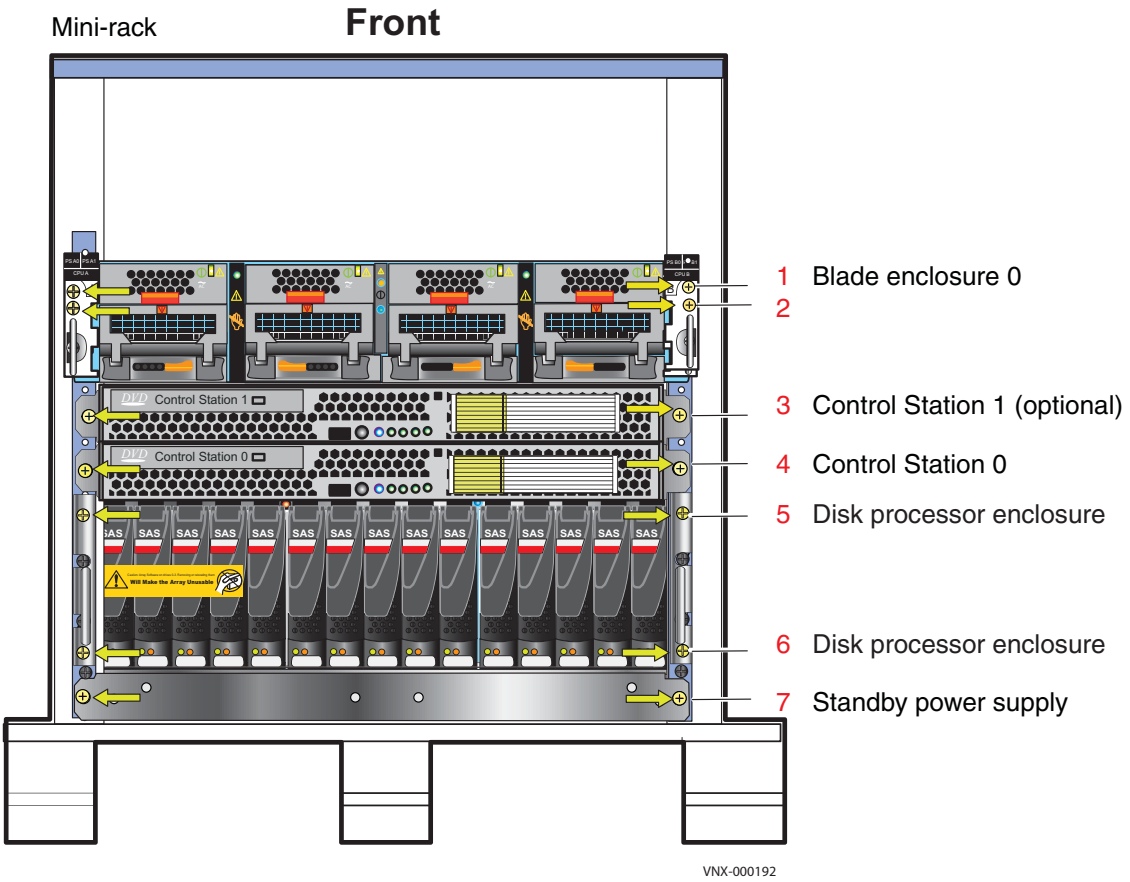


**Figure 1** Mini-rack components

**CAUTION**

**Some of the components in the mini-rack are heavy and may require two people. If needed, use an appropriate lifting device (mechanical lift).**

**CAUTION**

**These components are not interchangeable. Ensure that you install the components in the following order: SPS, DPE, CS0, CS1 (optional), and blade enclosure 0. Otherwise, your storage system will not operate properly.**

4. Starting from the top of the mini-rack, carefully slide the components out of the mini-rack and stack them in the reverse order of how they will be placed in your cabinet as shown in Figure 2. Be sure to place the first removed component on an antistatic floor or workbench pads.

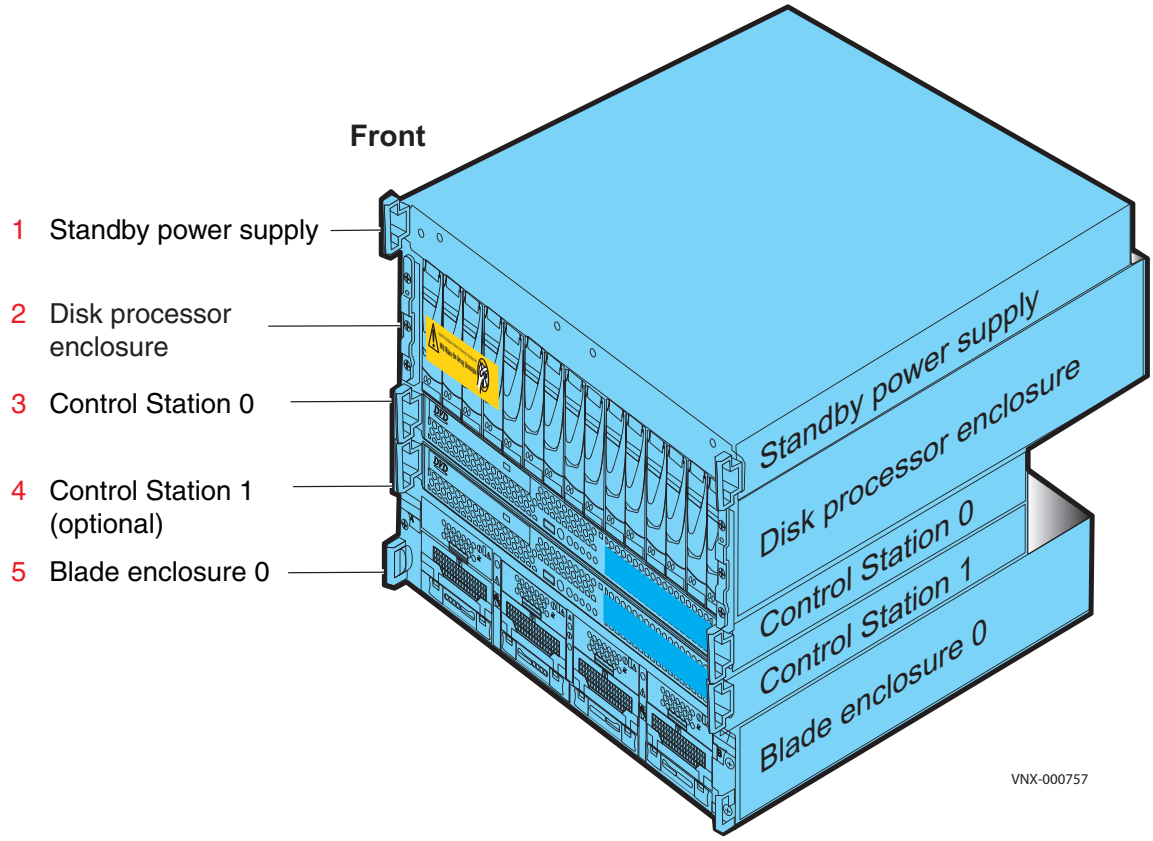


**Figure 2** Remove mini-rack contents

5. Unscrew all front and rear screws and remove the 8U ganged rails from the mini-rack as shown in Figure 3 on page 13.

6. Retain all the removed rails and screws for later assembly of the rails into a site rack.

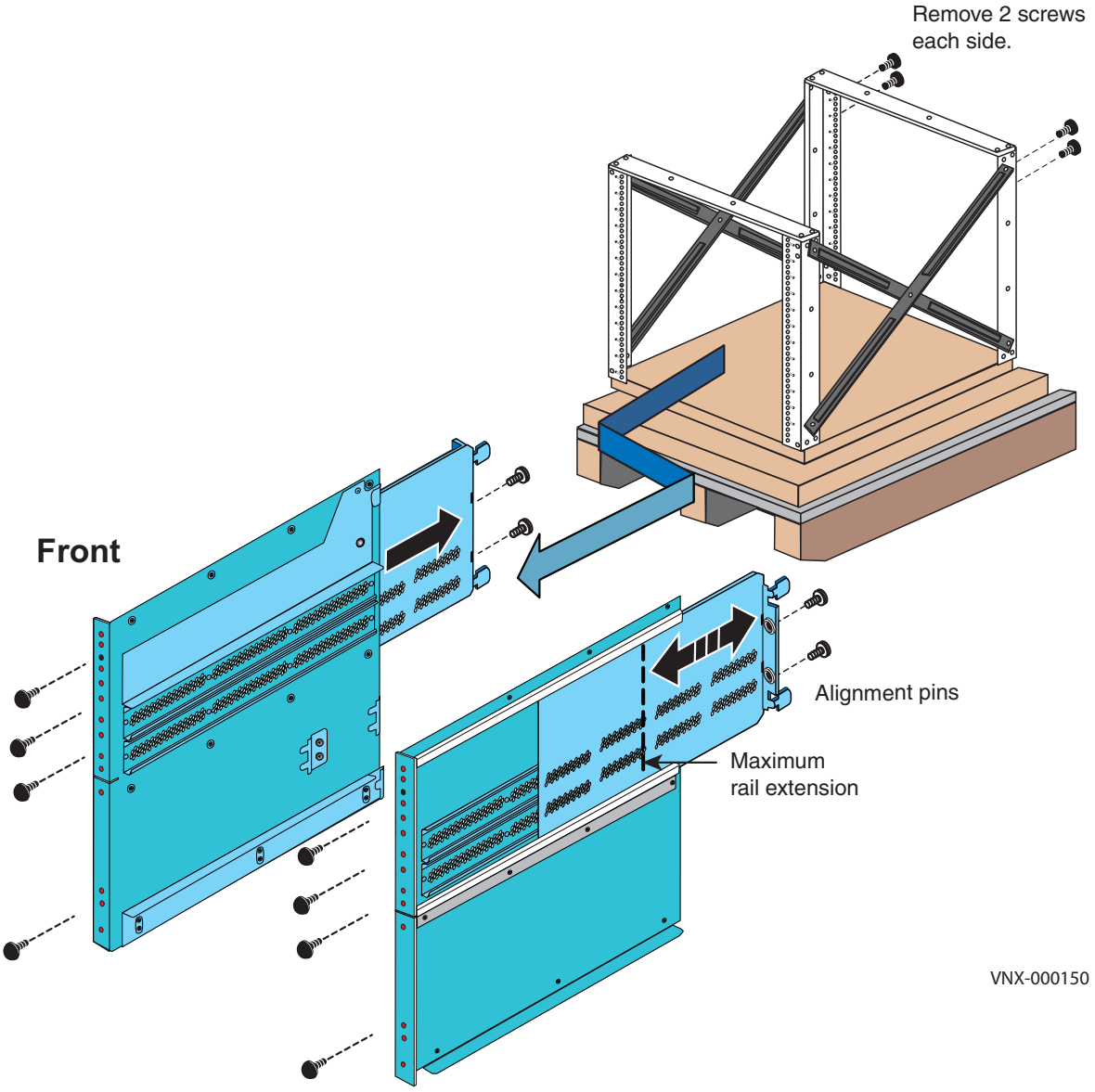


**Figure 3** Removing ganged rails

# Assemble components in your cabinet

## Installing rails

1. Slide the 8U ganged rail into the appropriate location in the site rack (for space considerations find the lowest available space) as shown in Figure 4.
2. Insert the alignment pins into the holes in the back of the rack. The rails must be level front to back and with the companion rail left to right.
3. Install the screws to hold the ganged rail in place.

   **Note:** These screws were previously removed from the mini-rack that held the ganged rails in the mini-rack.

   Wait until all screws are in place before you tighten the screws.

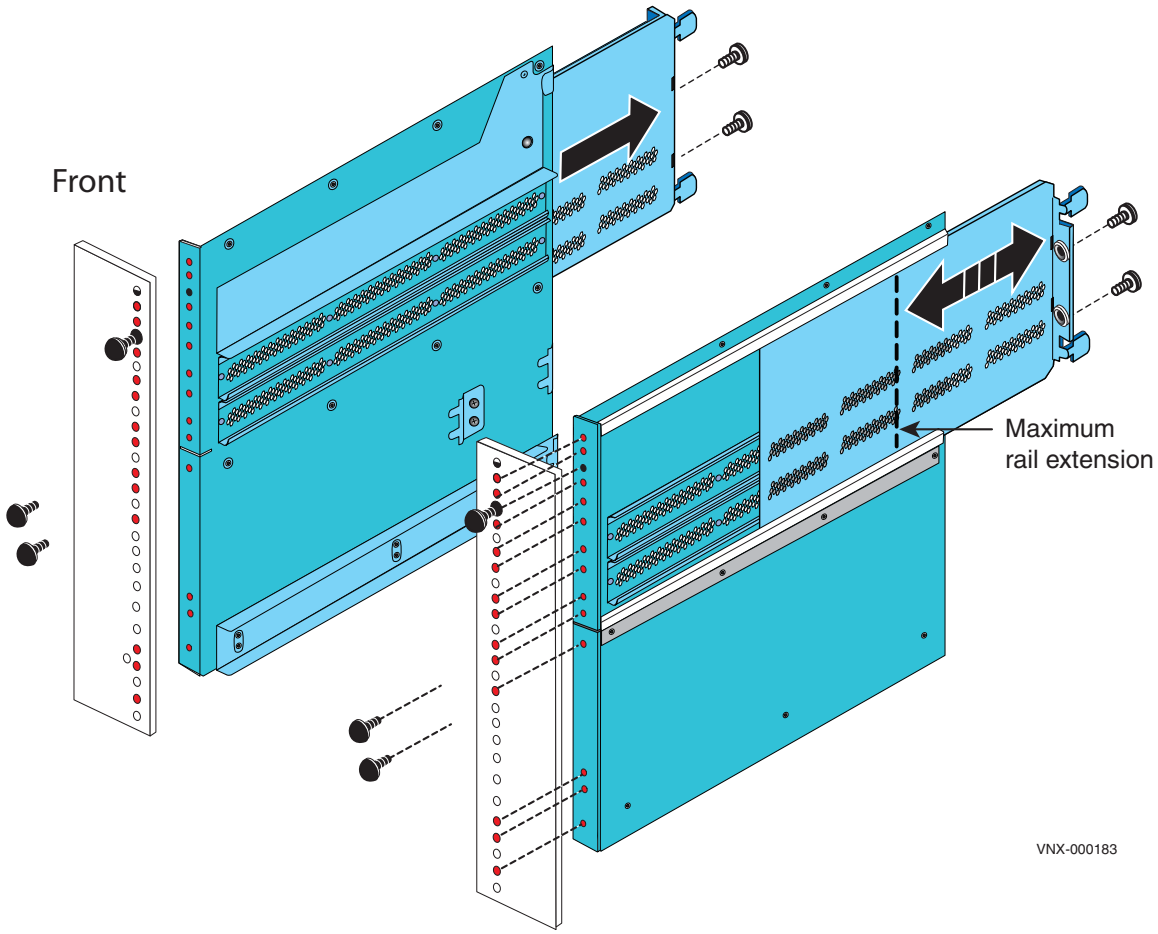


**Figure 4** Installing rails

# Installing components

**CAUTION**

**Some of the components are heavy and may require two people. If needed, use an appropriate lifting device (mechanical lift).**

The components to install include:

- Standby power supply
- Disk processor enclosure
- Control Station
- Blade enclosure

Figure 5 shows an example of the front view of the VNX5300 components. Figure 6 on page 17 shows an example of the rear view of the VNX5300 components.

The *VNX5300 Hardware Information Guide* provides more detail on each of these components.

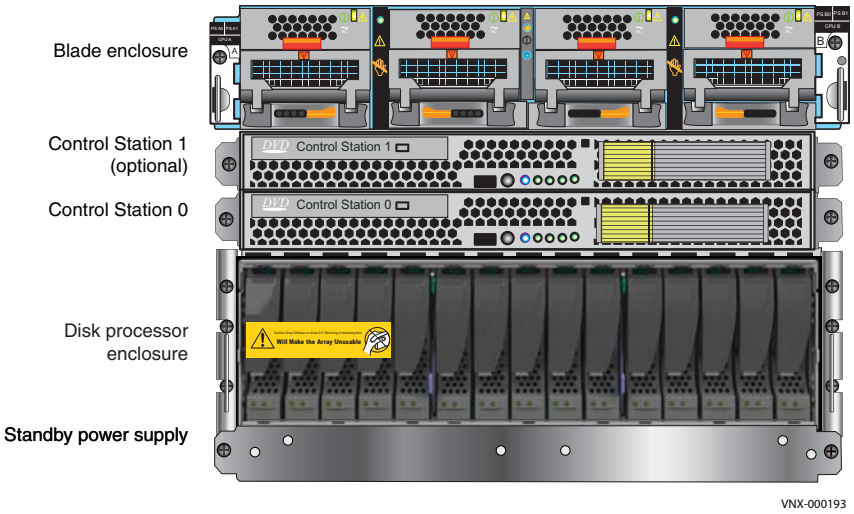


**Figure 5** Front view of VNX5300 Unified

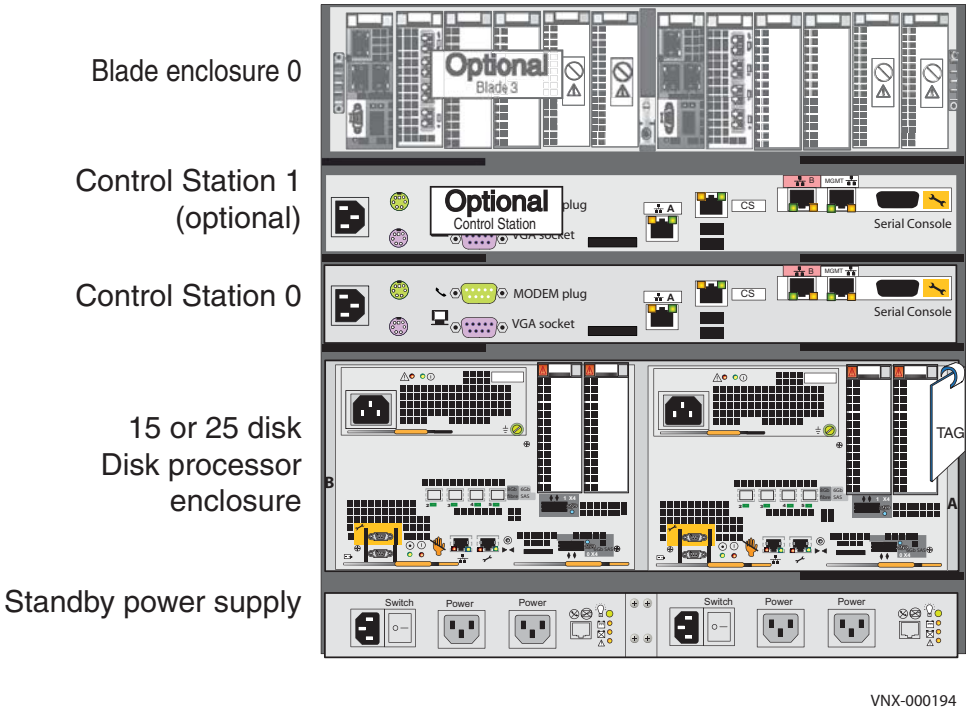


**Figure 6** Rear view of VNX5300 Unified

## Installing the standby power supply

1. Slide the SPS enclosure into the cabinet rails at the bottom of the rack as shown in Figure 7. Ensure that the enclosure is fully in the cabinet. The rail stops in the back will seat into the back of the enclosure at the correct depth, and the front of the enclosure will be flush with the cabinet face.
2. Attach, but do not tighten, the bezel brackets by inserting the screws through the brackets, the SPS component, the cabinet rail and then into the gang rail.
3. Tighten the screws only once all of the components are in place.

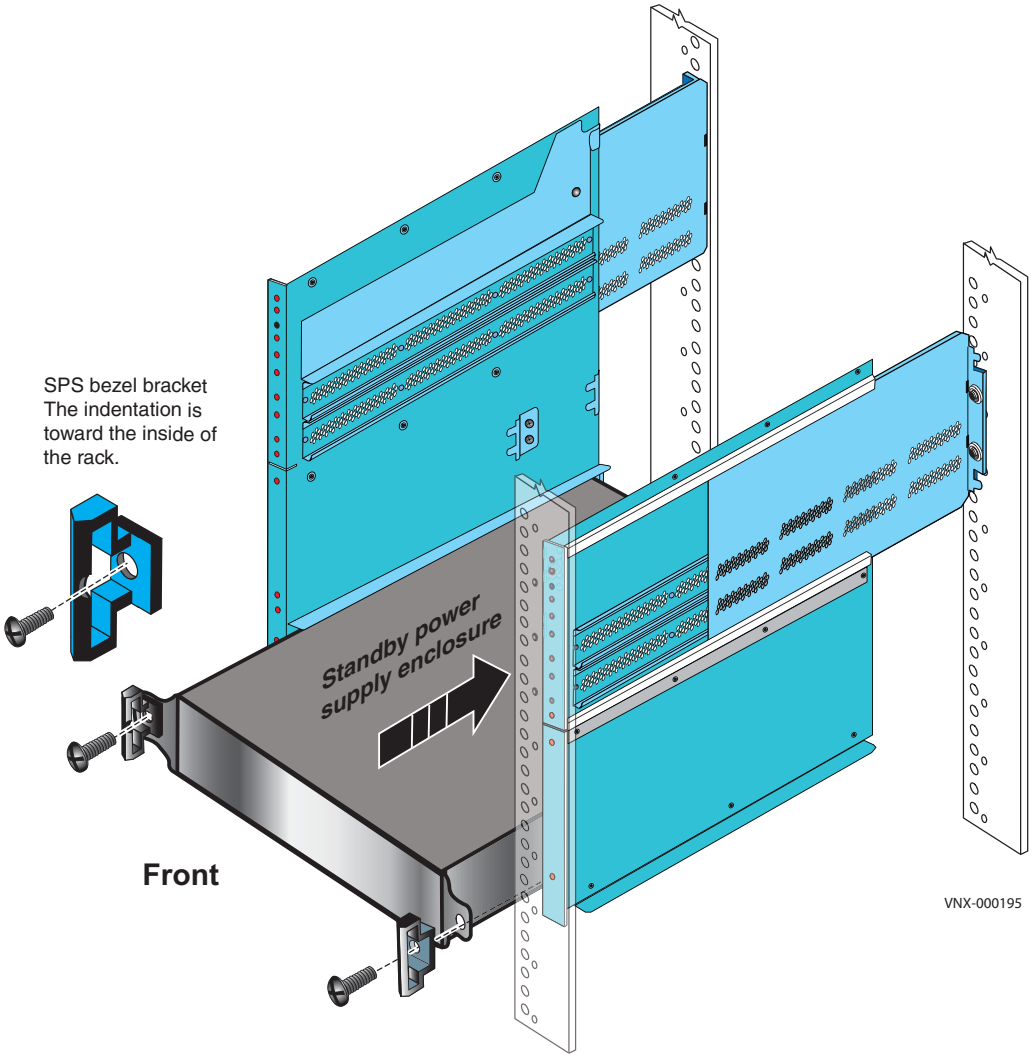


**Figure 7** Installing the standby power supply

## Installing disk processor enclosure

There are two types of disk processor enclosures (DPEs). Your disk processor enclosure can be either a 3U, 25 2.5” drive DPE or a 3U, 15 3.5” drive DPE as shown in Figure 8. It goes into the next available space in the ganged rails.

**3U, 25 2.5” drive Disk processor enclosure front**

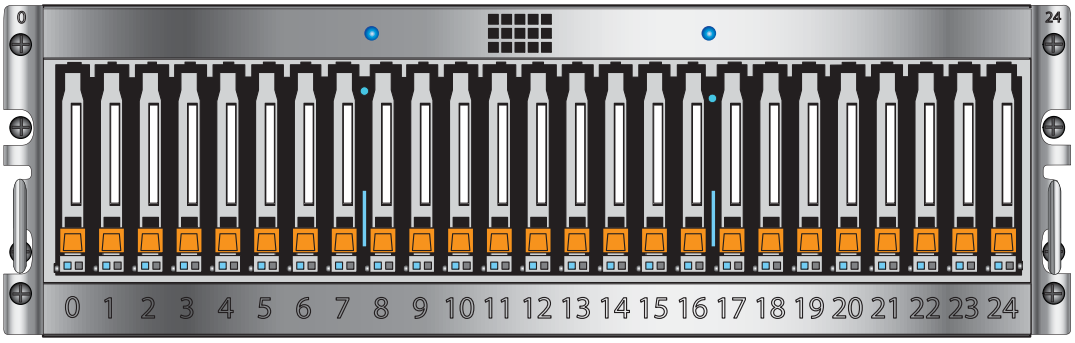


**3U, 15 3.5” drive Disk processor enclosure front**

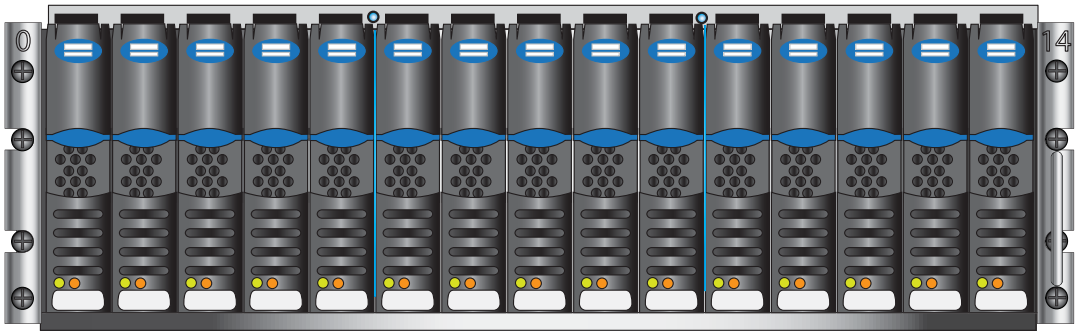


**3U, Disk processor enclosure rear**

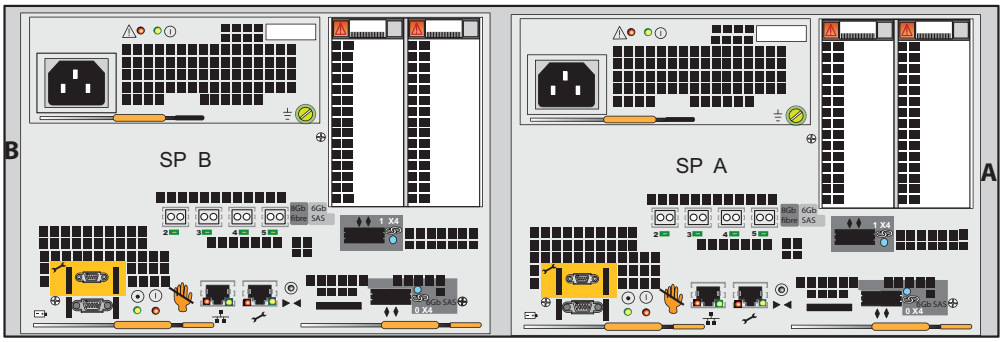


VNX-000188

**Figure 8** Types of DPEs

1. Look for the Product ID/SN on the product serial number tag (PSNT) located at the back of the DPE as shown in Figure 9.
2. Record this number. You will use this number when you register the product during system setup as described in "Set up" on page 53.

**IMPORTANT**

Be careful when you slide the enclosure into the rails. The PSNT tag on the corner of the enclosure as shown in Figure 9 can inadvertently become jammed, be cut off, or block the enclosure seating.

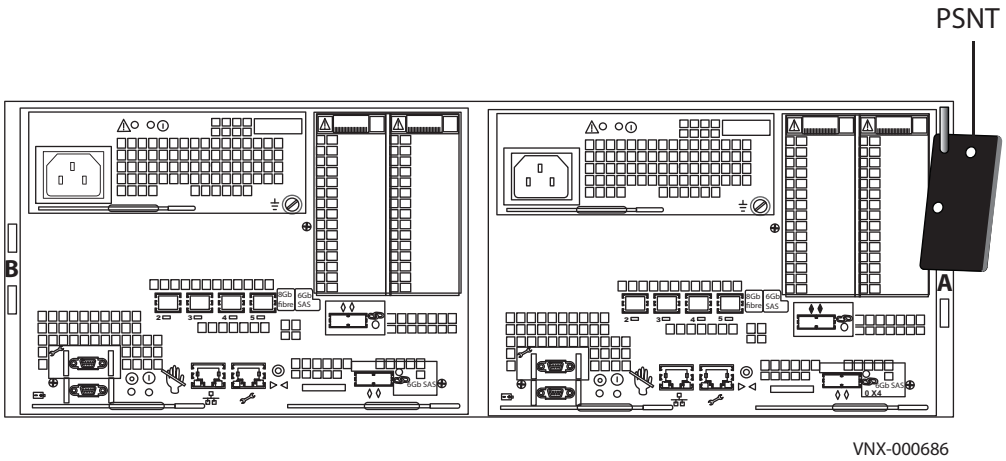


**Figure 9** The location of the PSNT tag on the rear of the 3U DPE

3. Slide the disk processor enclosure (DPE) into the slot above the SPS as shown in Figure 10 on page 21. Ensure the enclosure is fully in the cabinet. The rail stops in the back will seat into the back of the enclosure at the correct depth, and the front of the enclosure will be flush with the cabinet face.
4. Working in a diagonal pattern bottom left and top right, bottom right and top left, attach, but do not tighten, the component by inserting the four screws through the DPE, the cabinet rail and into the gang rail as shown in Figure 10 on page 21.

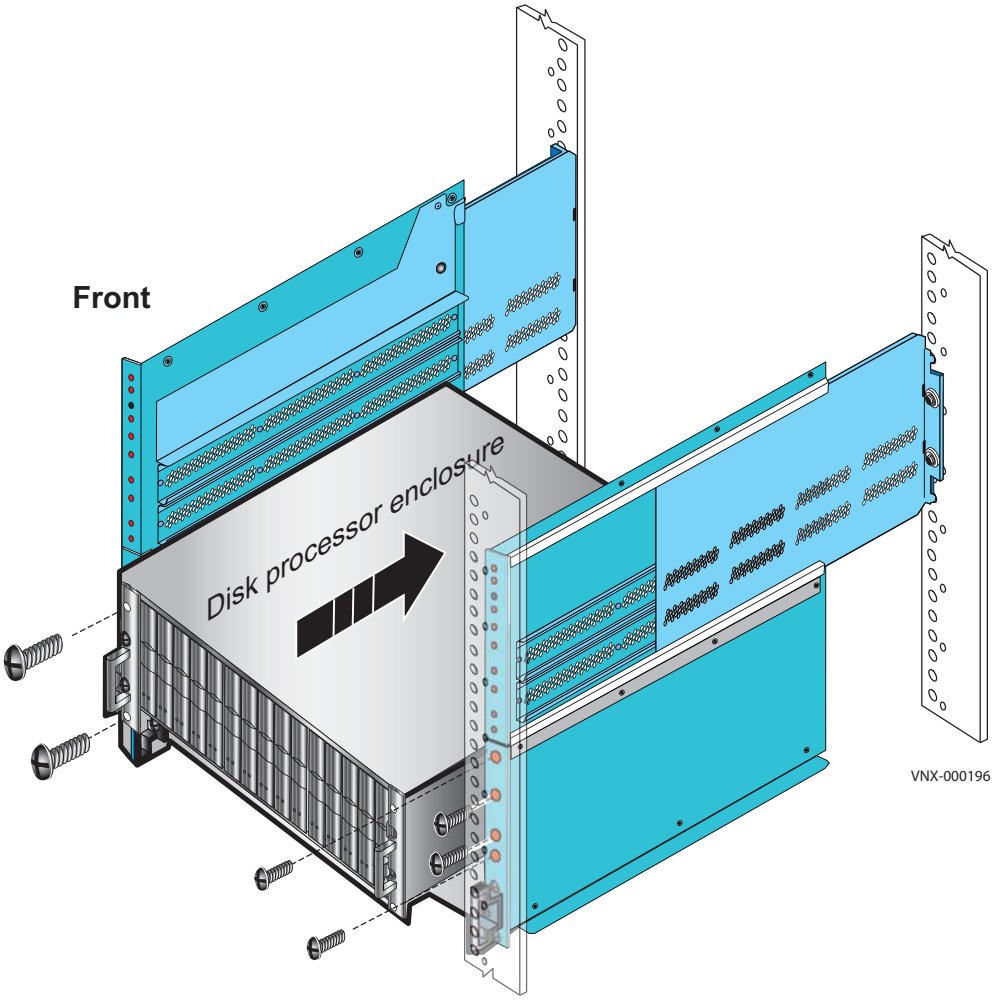


**Figure 10** Installing DPE

## Installing Control Stations and extension cables

**⚠CAUTION**

**Ensure that you install the correct Control Station. CS0 should be installed before CS1, remembering the location of CS0 when you removed it from the mini-rack.**

1. Slide the primary Control Station (CS0) into the slot above the DPE as shown in Figure 11.
2. Attach, but do not tighten, the bezel brackets by inserting the screws through the brackets, the Control Station, the cabinet rail, and into the gang rail.
3. Connect the extension cables after the Control Station has been installed into the ganged rail.

   **Note:** Connect the CS0 B extension cable to the RJ-45 connector (labeled B on the CS) and connect the CS0 MGMT extension cable to the RJ-45 connector (labeled MGMT on the CS).

4. Repeat steps 1-3 if secondary Control Station (CS1) is shipped with the order. Extension cables will be labeled CS1.

   **Note:** Connect the CS1 B extension cable to the RJ-45 connector (labeled B on the CS) and connect the CS1 MGMT extension cable to the RJ-45 connector (labeled MGMT on the CS).

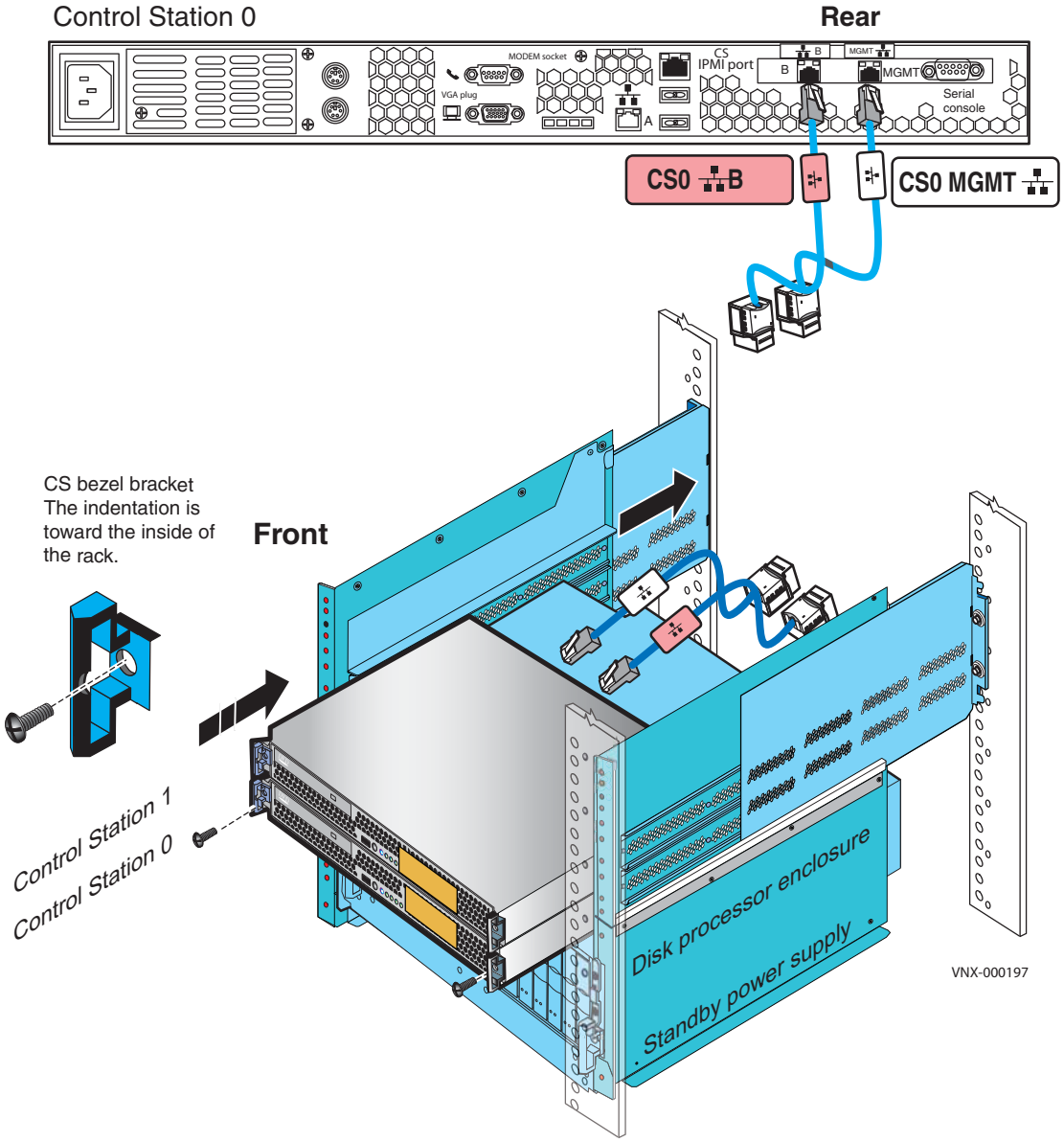


**Figure 11** Installing the Control Station(s) and extension cables

## Installing blade enclosure 0

1. Slide Blade Enclosure 0 above the Control Stations of the 8U ganged rails inserting the component into the tabs at the rear of the rails as shown in Figure 12.
2. Working in a diagonal pattern bottom left and top right, bottom right and top left, attach, but do not tighten, the component by inserting the four screws through the blade enclosure, the cabinet rail, and into the ganged rail as shown in Figure 12.
3. If there are no more components to insert, tighten all the screws.

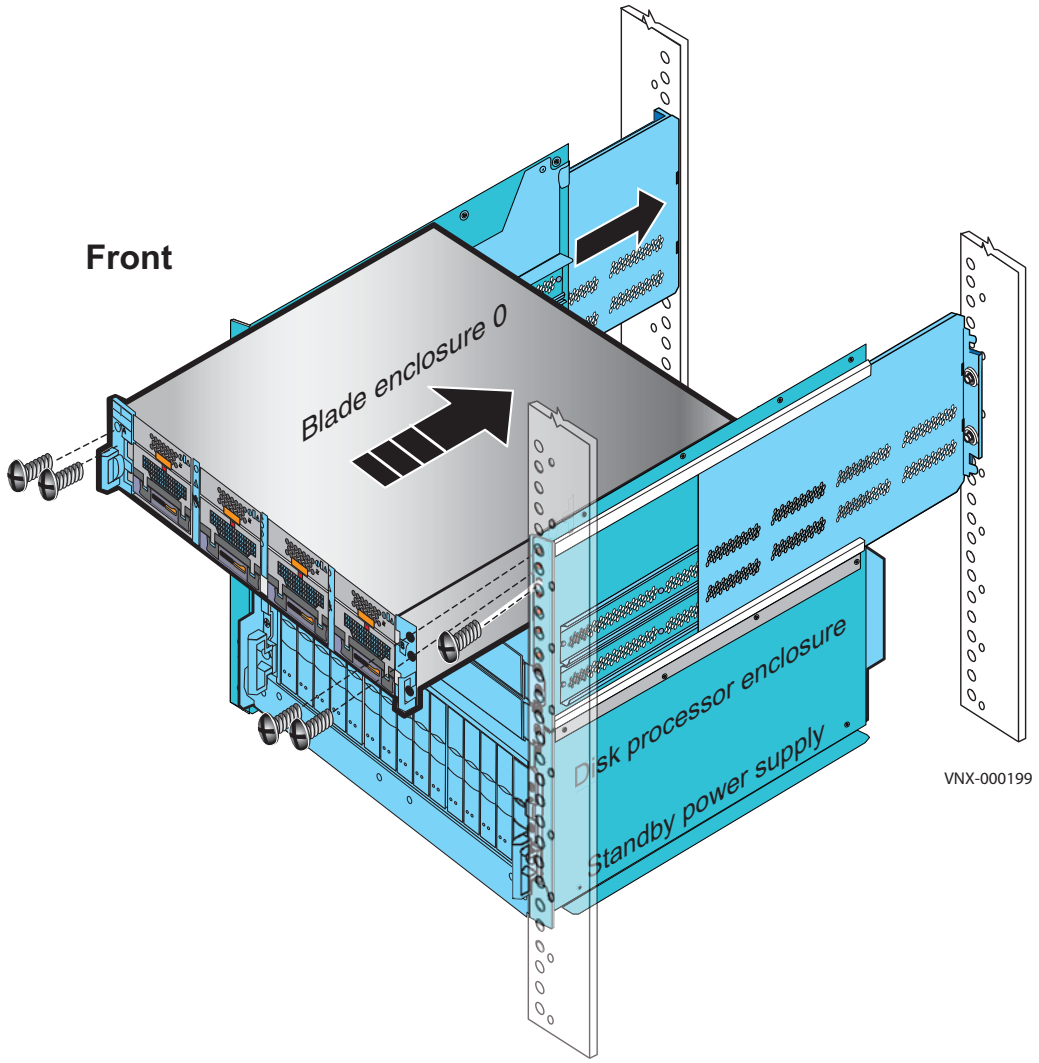


**Figure 12** Installing blade enclosure 0

# Cable your system

Cables for your system have cable labels pre-attached.

## Cabling Control Station, modem, and public LAN

Your system may contain one or two Control Stations. The primary Control Station is CS0 and an optional secondary Control Station is CS1.

### Cabling CS0

1. If you have not removed the labels from the front of CS0 and CS1 (if applicable), remove them now and attach to the inside front cover of this document.
2. Locate the cables shown in Figure 13. You have already connected extension cables B and C when you installed the Control Station.

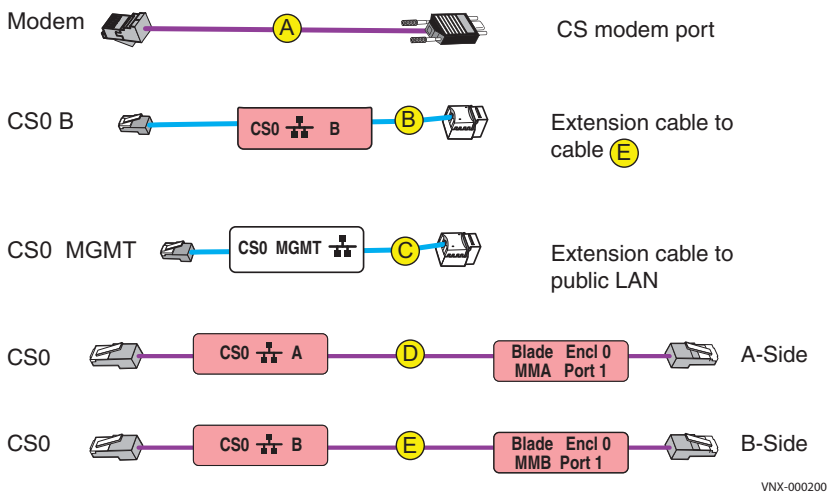


**Figure 13** CS0 cables

3. Connect CS0 to the customer modem, if applicable as shown in Figure 14. (A)
4. Connect your public LAN via a CAT5e or better Ethernet cable (customer supplied) to the CS0 MGMT extension cable as shown in Figure 14. (C)

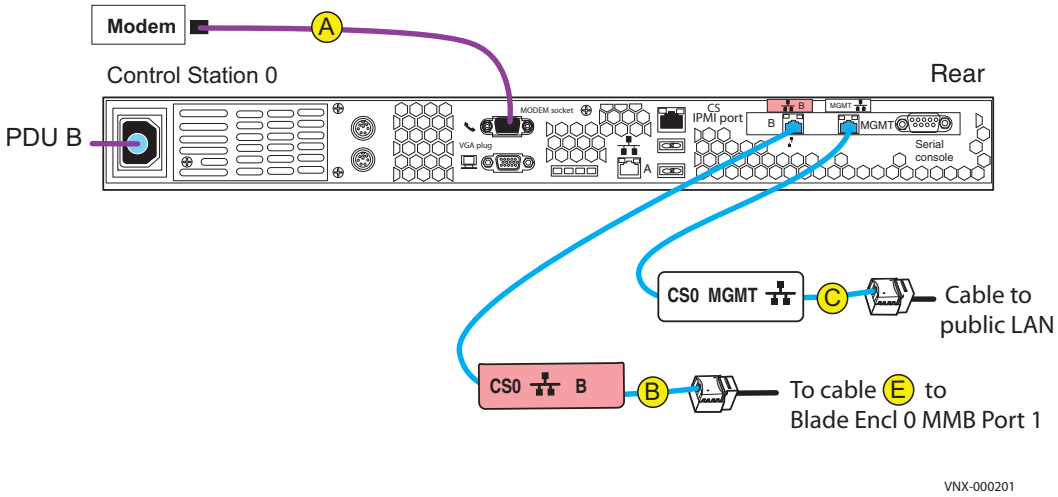


**Figure 14** Cabling CS0 to modem and public LAN

5. Connect CS0 A to blade enclosure 0 management module A (MMA) port 1 as shown in Figure 15. (D)
6. Connect CS0 B extension cable to blade enclosure 0 management module B (MMB) port 1 as shown in Figure 15. (B) and (E)

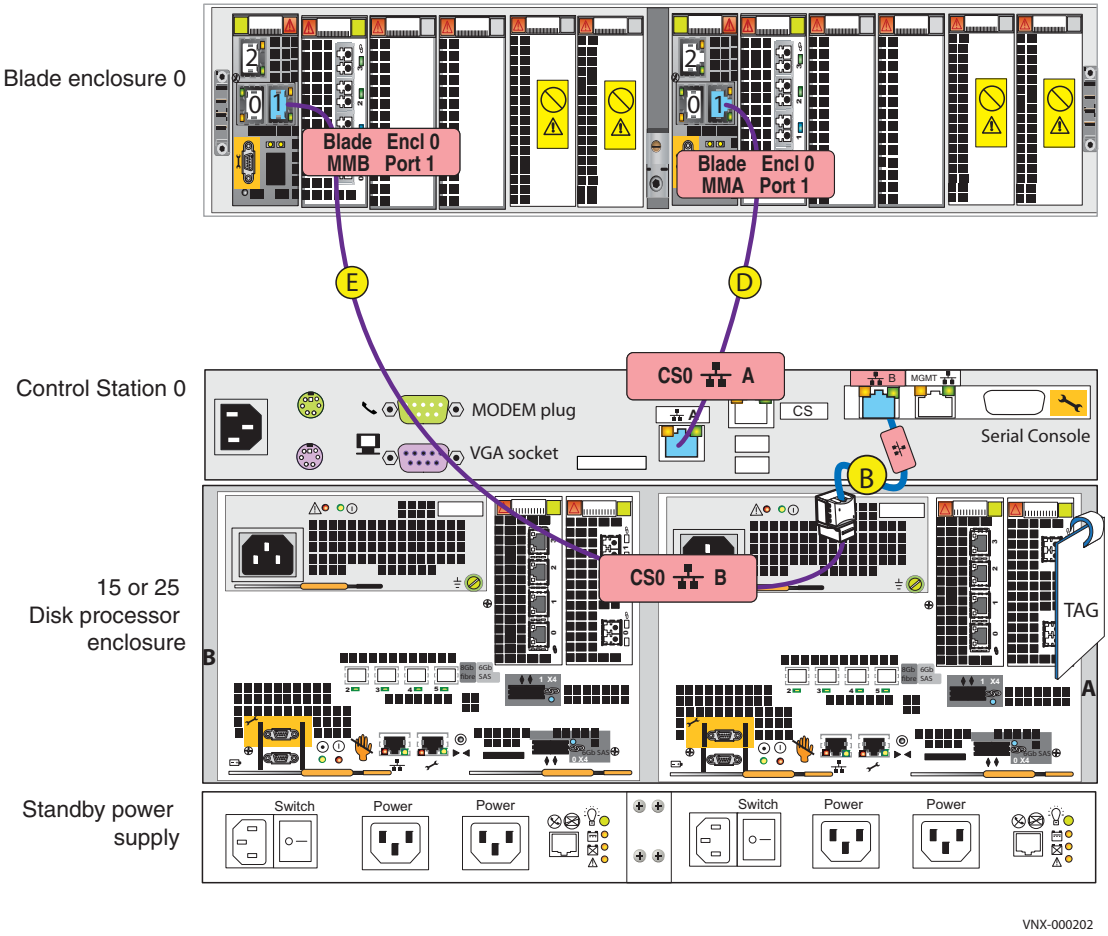


**Figure 15** Cabling CS0 to blade enclosure 0

## Cabling CS1 (optional)

1. Locate the cables shown in Figure 16. You have already connected extension cables C and D when you installed the Control Station.

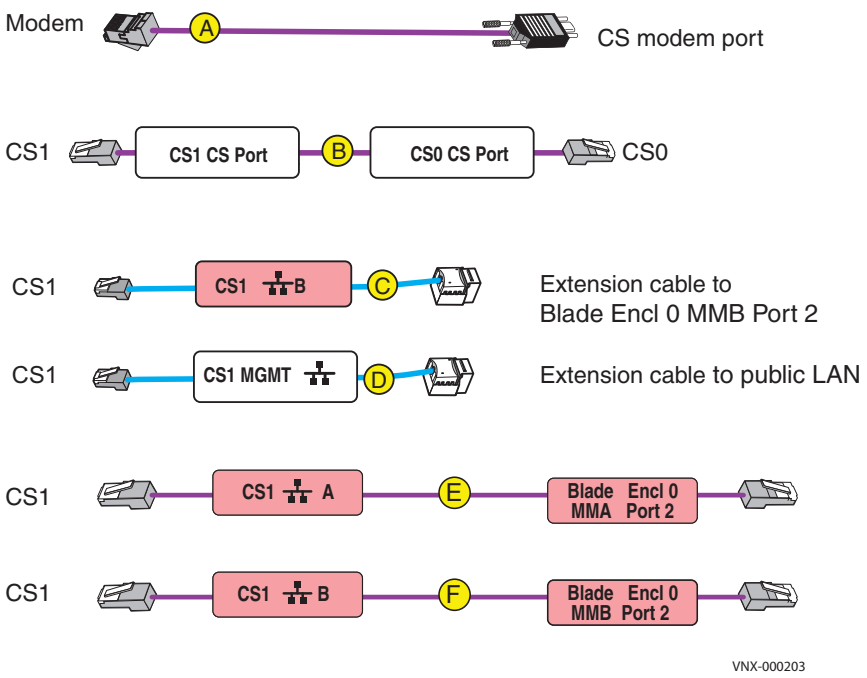


**Figure 16** CS1 cables

2. Connect CS1 to the customer modem, if applicable as shown in Figure 17. (A)
3. Connect CS1 Intelligent Platform Management Interface (IPMI) to CS0. (B)
4. Connect your public LAN via a CAT5e or better Ethernet cable (customer supplied) to the CS1 MGMT extension cable. (D)

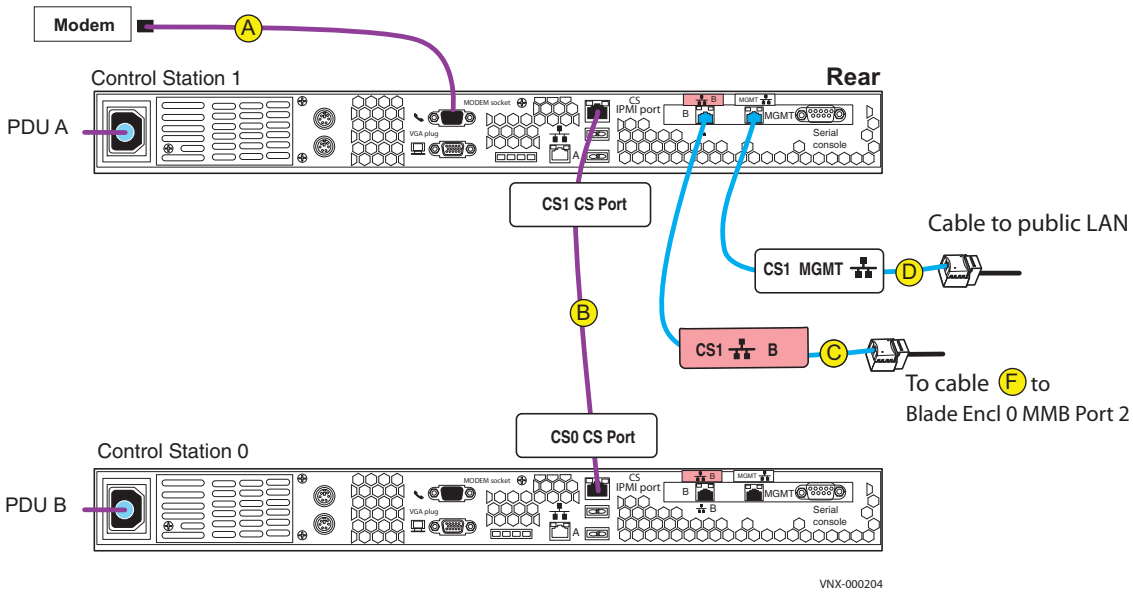


**Figure 17** Cabling CS1 to modem and public LAN

5. Connect CS1 A cable to Blade Enclosure 0 MMA port 2 as shown in Figure 18. (E)
6. Connect CS1 B cable to Blade Enclosure 0 MMB port 2. (C) and (F)

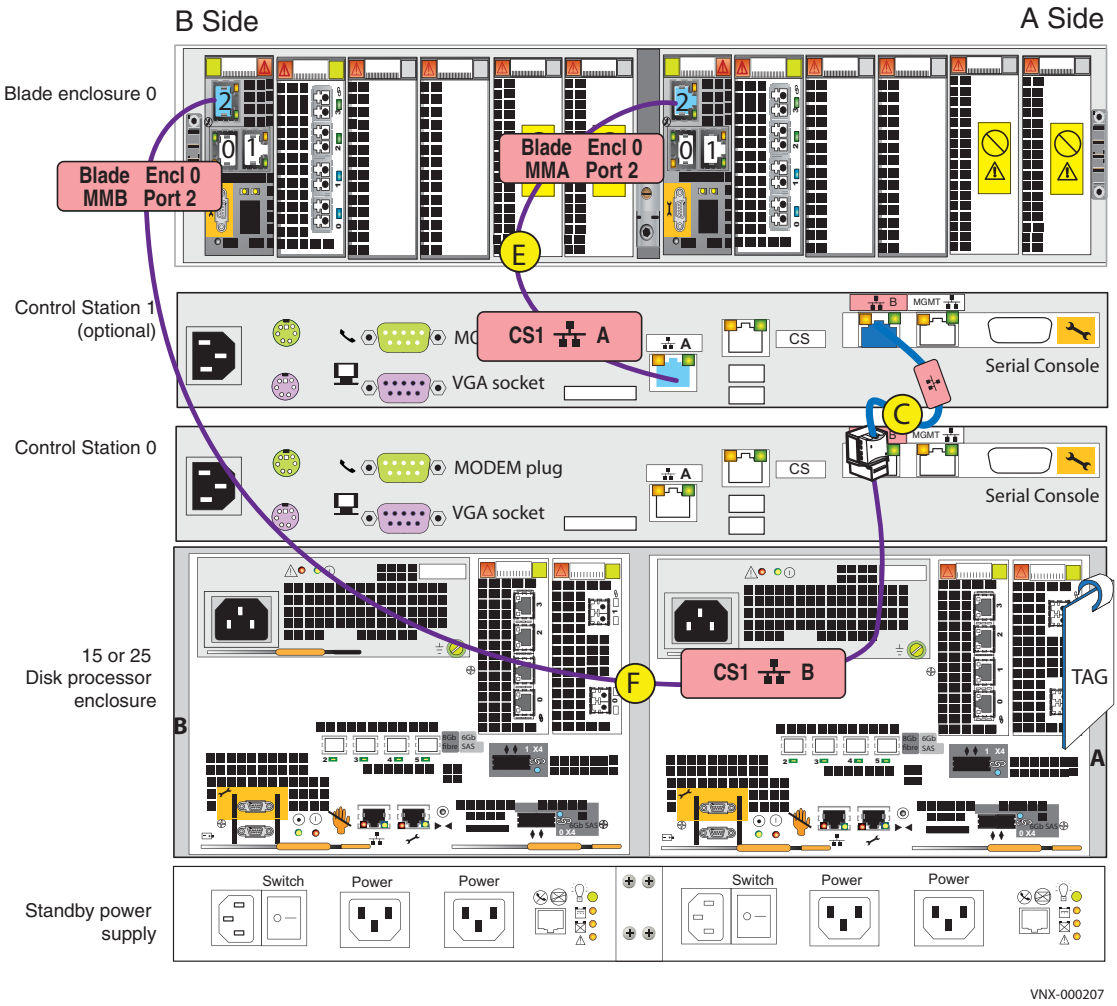


**Figure 18** Cabling CS1 to blade enclosure 0

# Cable storage processors and blades

You will have received a pair of Fibre Channel cables per blade.

## Cabling storage processor A (SP A)

**CAUTION**

**Ensure that you remove the dust caps from the cables before installation.**

1. Locate the Fibre Channel cables as shown in Figure 19. Only blades 2 and 3 will be set up at this time.

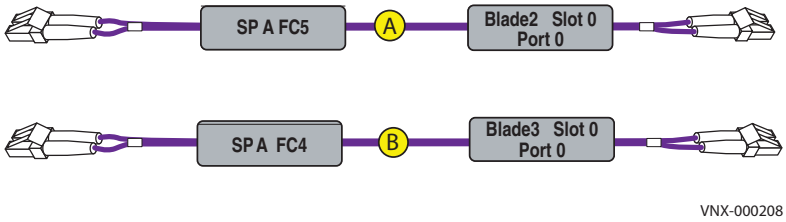


**Figure 19** SP A Fibre Channel cables

2. Connect SP A port 5 to blade 2 port 0 as shown in Figure 20. (A)
3. Connect SP A port 4 to blade 3 port 0 as shown in Figure 20, (B) if applicable.

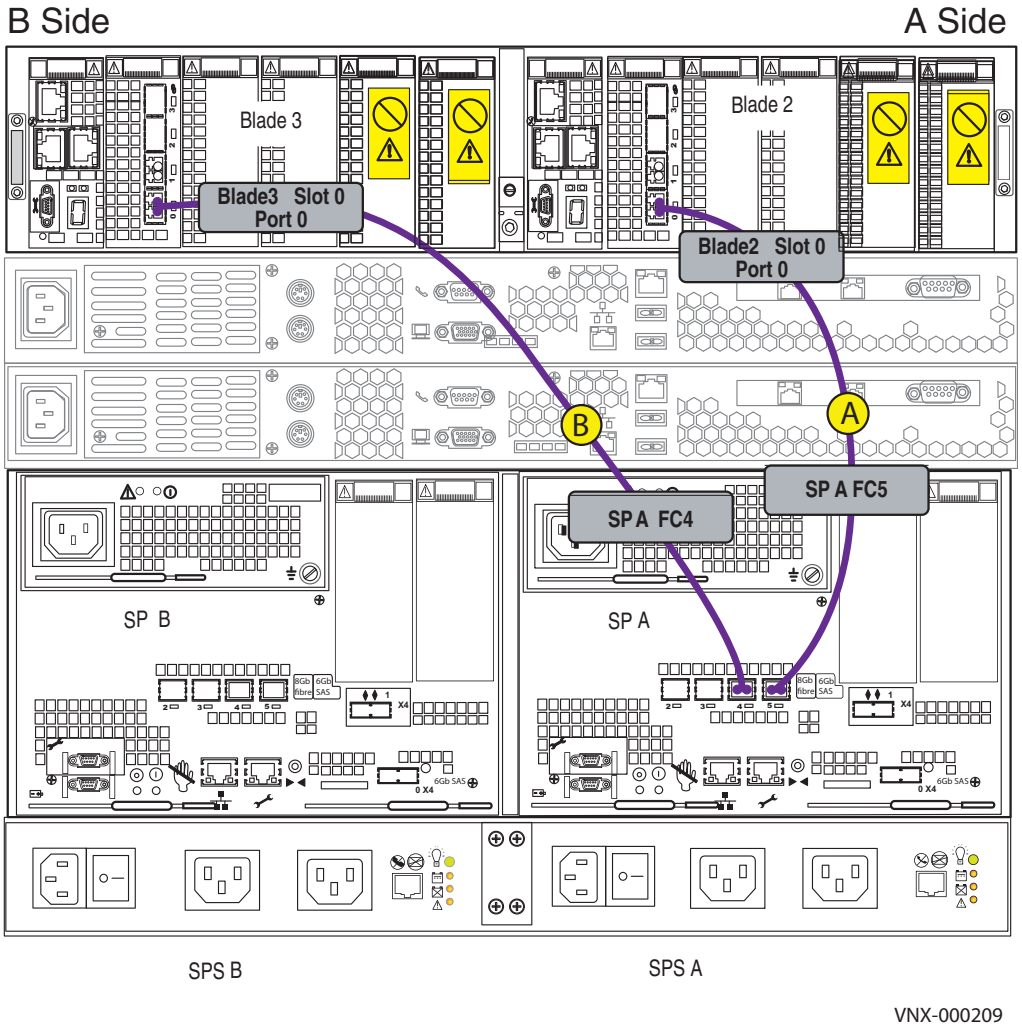


**Figure 20** Cable SP A to blades

## Cabling storage processor B (SP B)

**⚠CAUTION**

**Ensure that you remove the dust caps from the cables before installation.**

1. Locate the Fibre Channel cables as shown in Figure 21.

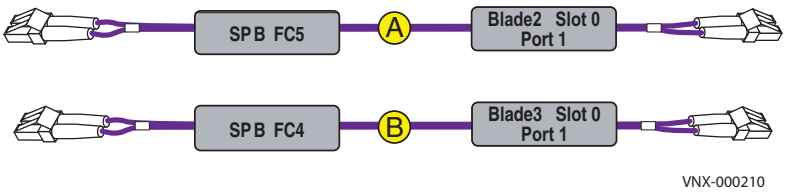


**Figure 21** SP B Fibre Channel cables

2. Connect SP B port 5 to blade 2 port 1 as shown in Figure 22. (A)
3. Connect SP B port 4 to blade 3 port 1 as shown in Figure 22, (B) if applicable.

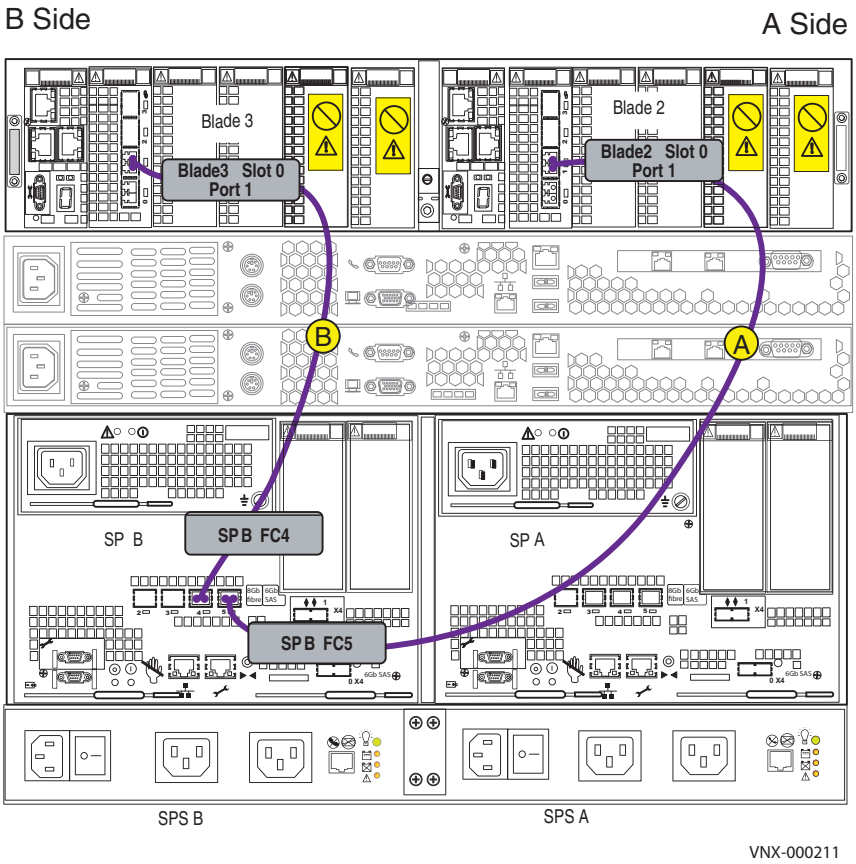


**Figure 22** Cable SP B to blades

# Cabling SPs to the blade management modules

## Cabling for one blade enclosure

1. Locate the cables as shown in Figure 23.

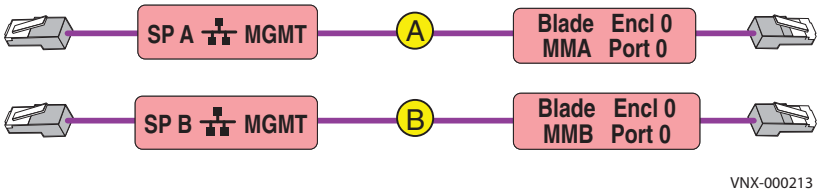


**Figure 23** Blade enclosure cables

2. Connect SP A MGMT to blade enclosure 0 port 0 as shown in Figure 24. A
3. Connect SP B MGMT to blade enclosure 0 port 0. B

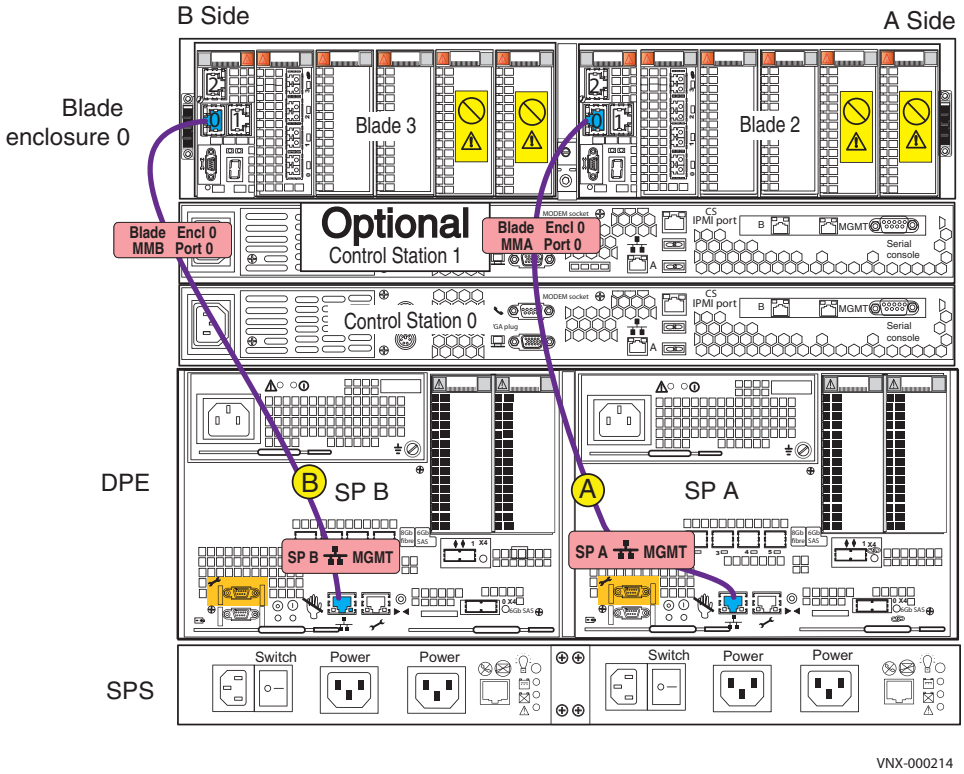


**Figure 24** Cabling SPs to one blade enclosure

# Cabling the standby power supply to SP serial port

1. Locate the cables as shown in Figure 25. These cables have RJ45 connections on one end and a 9-pin mini-connector on the other.

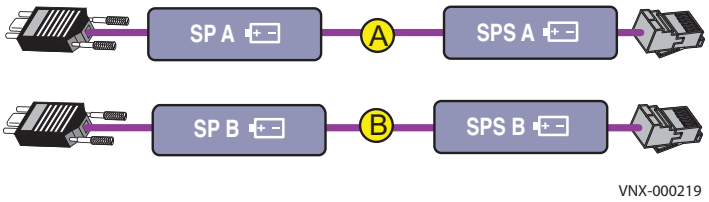


**Figure 25** SPS cables

2. Connect SPS A to the SP A serial port as shown in Figure 26. (A)
3. Optionally, connect SPS B to the SP B serial port. (B)

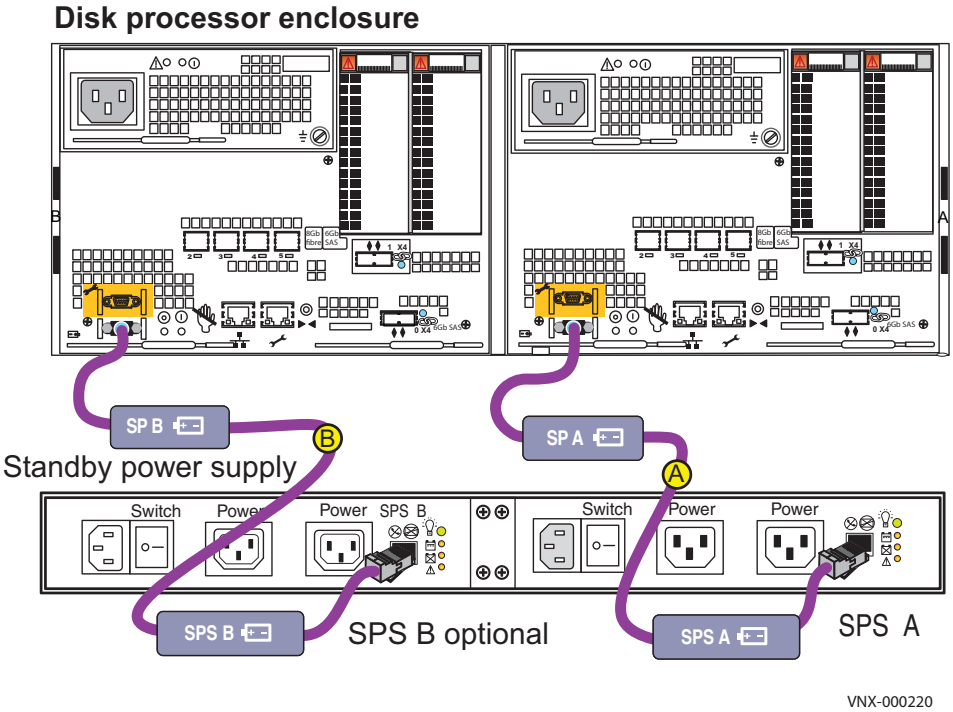


**Figure 26** Cabling SPs to SPS

# Power up

## Before you power up

1. Ensure that the switches for SPS A (H) and SPS B (I) are turned Off as shown in Figure 27 on page 38.
2. Ensure that the cabinet circuit breakers are in the On position, all necessary PDU switches are switched On, and power is connected.

## Connecting or verifying power cables

1. Connect or verify the power cables as shown in Figure 27 on page 38. Ensure that all the power cables are locked in place.

**Note:** Only storage processors should be connected to the SPS.

   a. If SPS B is installed, connect SPS B to PDU B. (A)
   b. If SPS B is installed, connect SPS B to SP B. (B) Otherwise, connect SP B to PDU B.
   c. SPS A to PDU A. (C)
   d. SPS A to SP A. (D)
   e. CS0 to PDU B. (E)

      **Note:** The LEDs begin flashing.

   f. Blade enclosure 0 to PDU B. (F)
   g. Blade enclosure 0 to PDU A. (G)
2. Turn on the SPS power switches. (H) (I)
3. Wait 15 minutes for the system to power up completely.
4. If the optional CS1 is installed, wait until Step 3 completes and the SP fault LED is turned off, then connect CS1 to PDU A. (J)

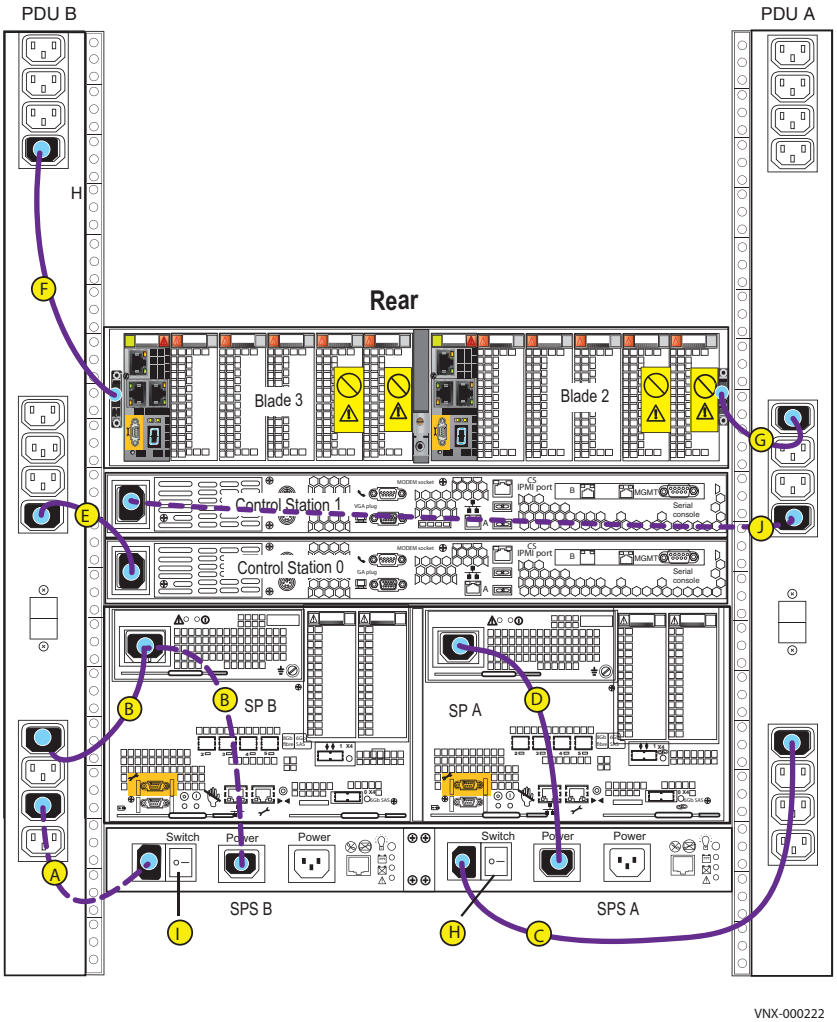


**Figure 27** Connecting power cables

# Verifying system status

While your system is powering up, you will see green, blue, and amber activity lights blink. You can verify that your system powered up completely after 10-15 minutes.

Table 4 lists the LEDs that you need to focus on to ensure that the system is powered up correctly. The *VNX5300 Hardware Information Guide* provides more information on all the LEDs.

**Table 4** System status LEDs

| Component | LED | Location | State/color |
|---|---|---|---|
| Blade Enclosure | Power | Front | On/blue or green |
| Blade power supply | Power | Front | On/green |
| | Fault | Front | Off |
| Blade CPU A and B | Power | Front | On/green |
| | Fault | Front | Off |
| Control Station | System status<br>System power | Front<br>Front | On/green<br>On/green |
| Disk processor enclosure | Power | Front | On/blue or green |
| | Fault | Front | Off |
| Disk processor power supply | Power<br><br>Fault | Rear of the unit (SP A and SP B)<br><br>Rear of the unit (SP A and SP B) | On/green<br>Blinking/amber (booting up)<br><br>Off |
| Disk processor SPA and B | Power<br><br>Fault/Status | Rear of the unit (SP A and SP B)<br><br>Rear of the unit (SP A and SP B) | On/green<br><br>Off |
| Standby power supply | — | Rear | The LEDs on the back of the SPS will flash until fully powered. |

Verify that the Control Station system Status and Power LEDs, located on the front are solid green as shown in Figure 28.

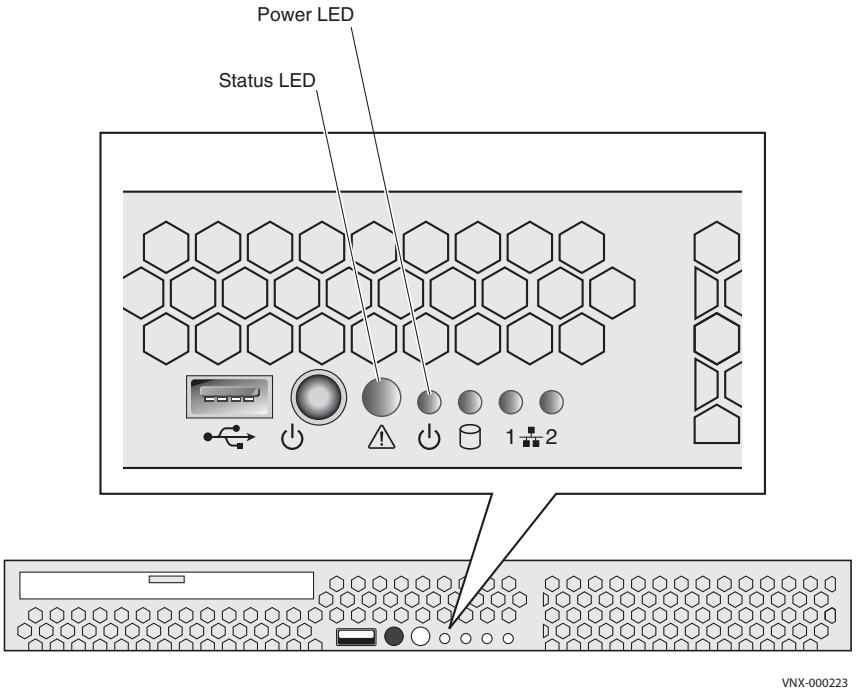


**Figure 28** CS LEDs

Verify that the blade enclosure and blade system Status and Power LEDs, located on the front are solid blue or green as shown Figure 29.

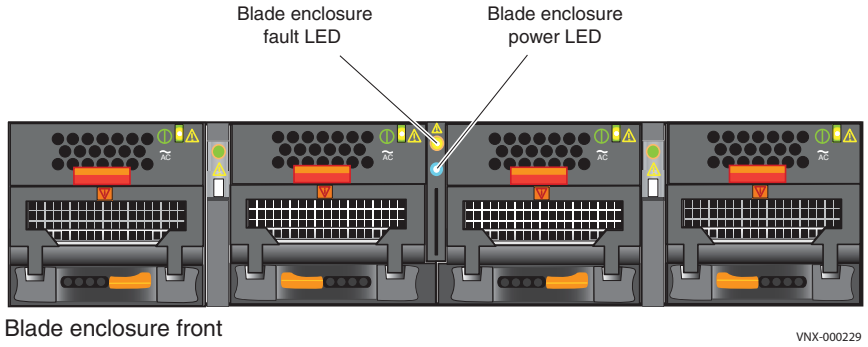


**Figure 29** Front of blade enclosure

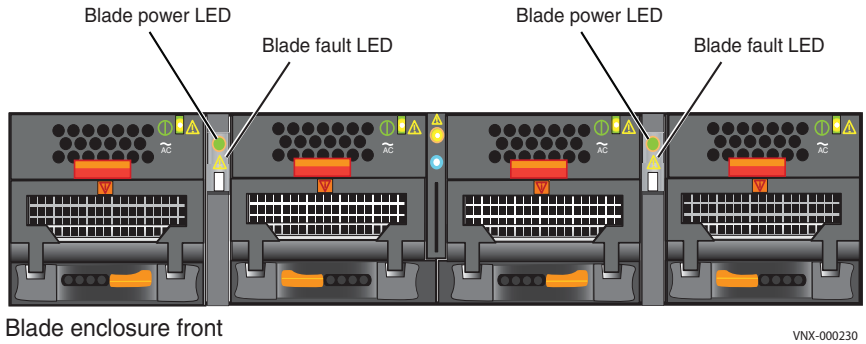


**Figure 30** Blade LEDs

Verify that the DPE and SP system Status and Power LEDs, located on the front are solid blue or green as shown Figure 31 and Figure 32 on page 42.

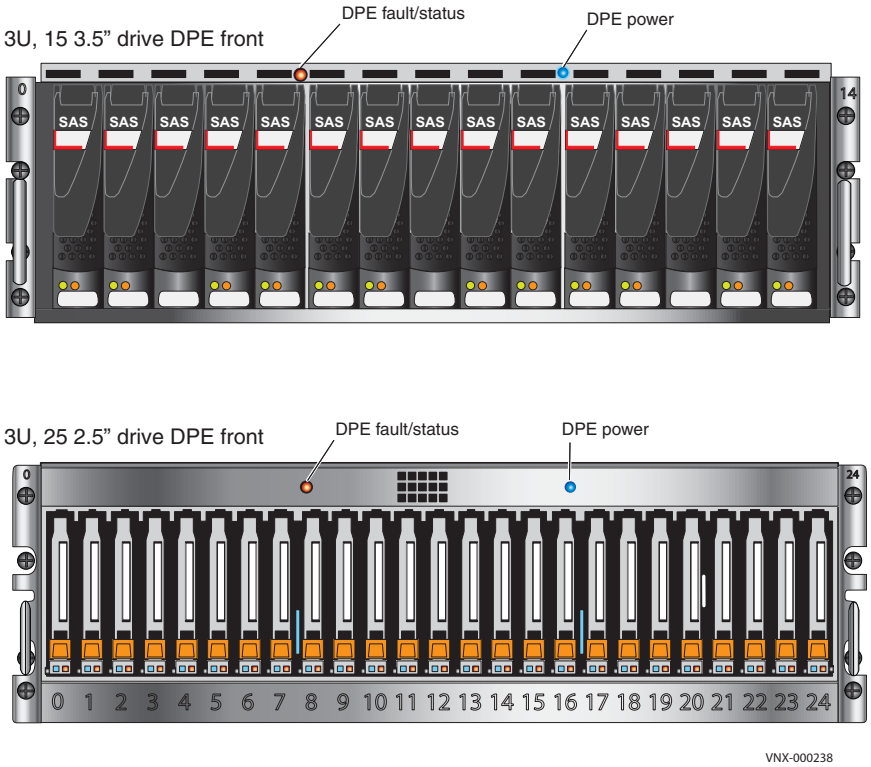


**Figure 31** 3U DPE LEDs

Verify that the SP Power LEDs on SP A and SP B located at the rear of the DPE are solid green and the SP Fault LED is off as shown in Figure 32 on page 42.

---

**Note:** If any fault LEDs are on, or if any power LEDs remain flashing after approximately 15 minutes of operation, contact your authorized service provider.

---

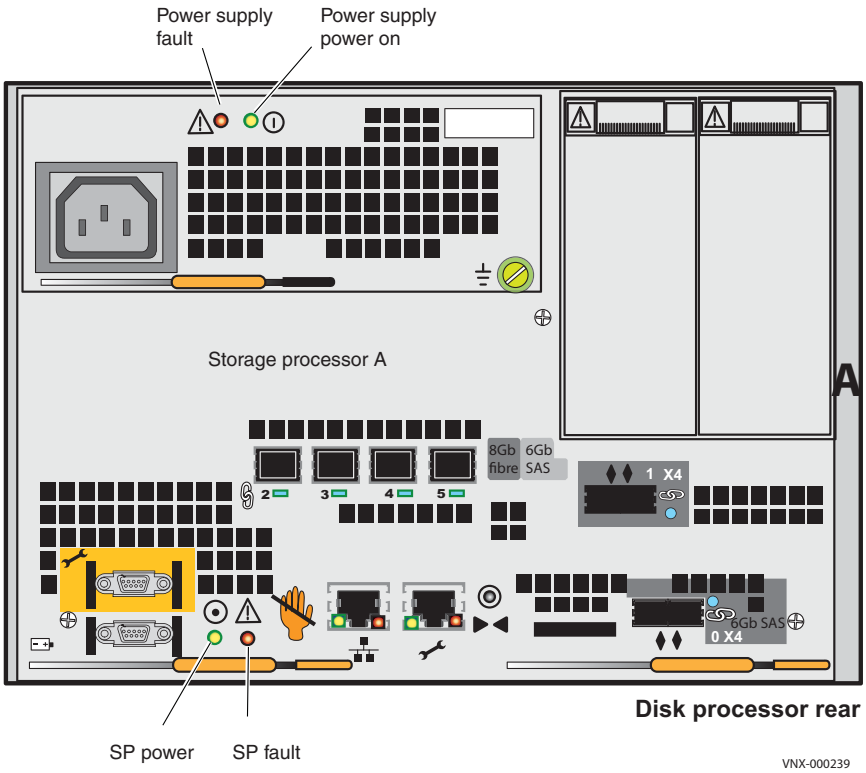


**Figure 32** SP and power supply LEDs

There are no LEDs on the front of the SPS.

The LEDs on the back of the SPS will flash until fully charged in about one hour as shown in Figure 33.

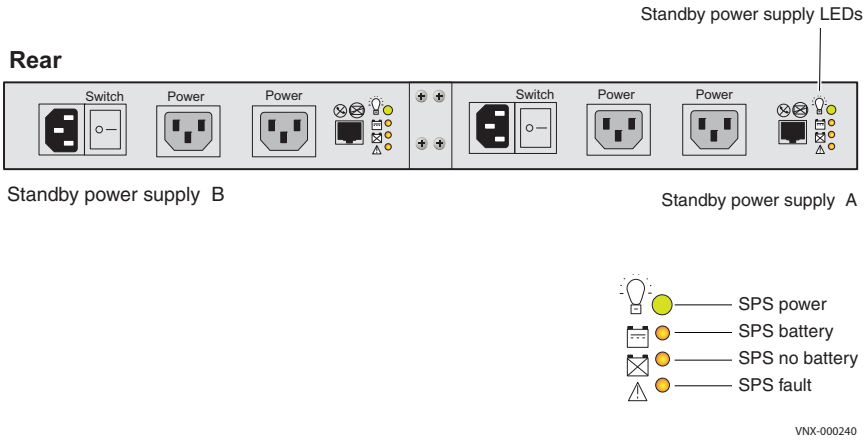


**Figure 33** SPS LEDs

# Add additional storage

The cabling examples described in this guide are for illustration purposes only. Your system cabling might be different based on how many DAEs you install and whether you use load balancing to install these DAEs.

## Disk-array enclosure types

DAEs are optional components that add extra storage. DAEs come in:

- 2U, 25 2.5'' drive DAE as shown in Figure 34.
- 3U, 15 3.5'' drive DAE as shown in Figure 35 on page 44.

They use a 2U rail kit for the 25 2.5'' drive DAE or a 3U rail kit for 15 3.5'' drive DAE.

If DAEs are used, the DAEs should be installed immediately above the blade enclosure in the cabinet. Either type of DAE may be installed. The arrangement of the DAEs in a cabinet may depend upon a number of factors. The *VNX5300 Hardware Information Guide* provides more information on DAE assembling and arrangement.

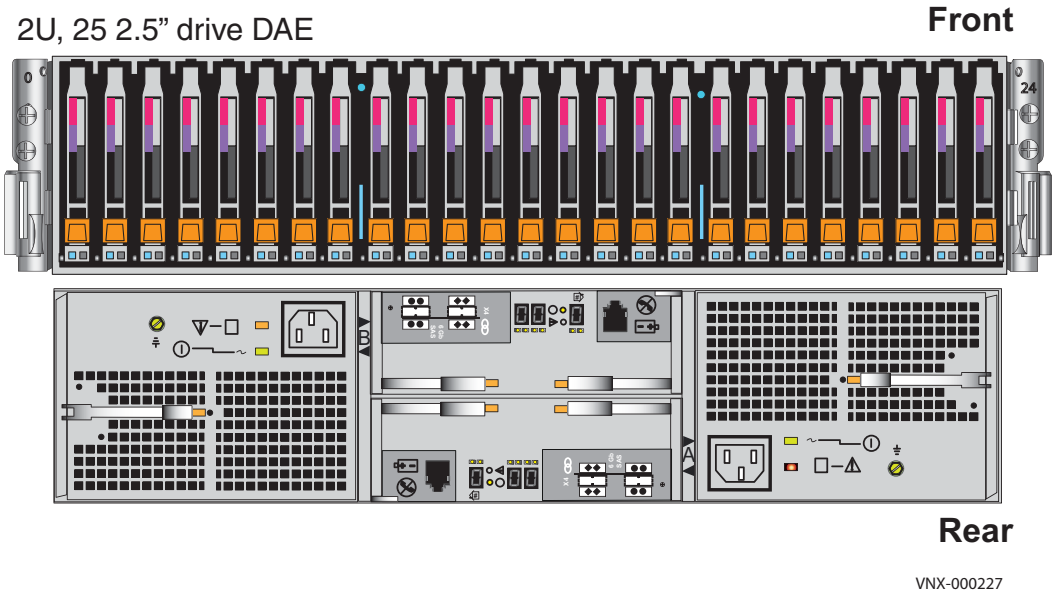


**Figure 34** 2U, 25 2.5'' drive DAE

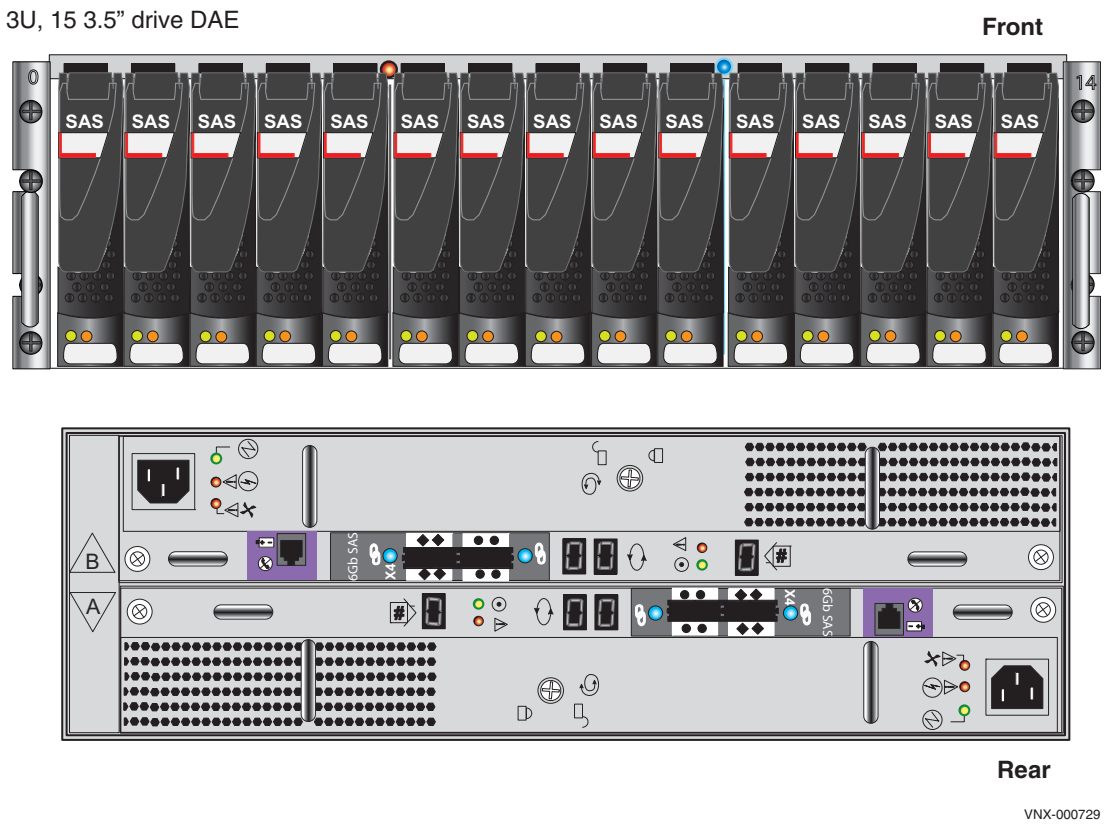


**Figure 35** 3U, 15 3.5'' drive DAE

# Assembling the DAEs

**⚠CAUTION**

**The DAE is heavy and should be installed into a rack by two people. To avoid personal injury and/or damage to the equipment, do not attempt to lift and install the enclosure into a rack without a mechanical lift or help from another person.**

1. Unpack shipping containers.
2. Verify that the following DAE components were shipped:
   - Mounting screws
   - Bezel and bezel key
   - SAS cables
   - Power cables
3. Label the cables:
   a. Locate the DAE cables and the sheet of labels.

b. Attach the cable labels by matching the icons on the connectors with the icons on the labels as shown in Figure 36 and Figure 39 on page 48.

c. Continue for all the SAS cables for your system.

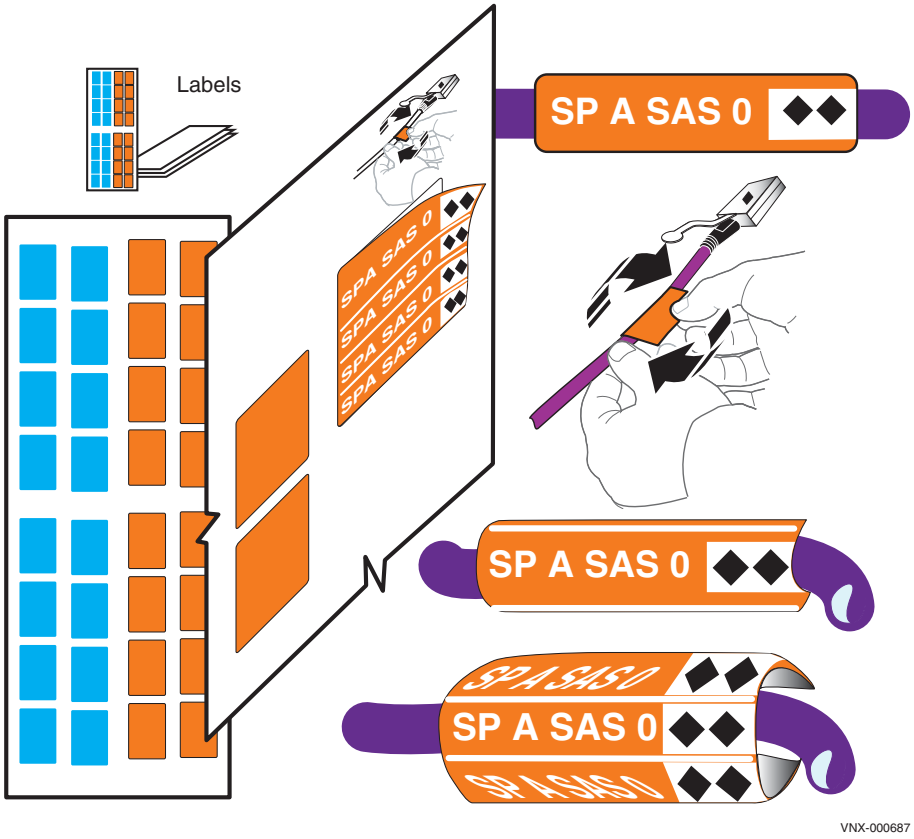


**Figure 36** Attach labels to the SAS cables

## Install the DAE rails

A 2U DAE will use 2U rails and the 3U DAE will use 3U rails. The DAE rails should be installed above the topmost blade enclosure in the cabinet. The rails must be aligned carefully so that they are level front to back and with the companion rail left to right.

Arranging DAEs in your cabinet, you should consider rack space, I/O load balancing across the disks, and convenience. For more on racking and cabling options, see the *VNX5300 Hardware Information Guide* provides.

The following procedure shows you how to install 3U DAE rails and a 3U DAE.

1. Insert the adjustable rail slide and seat both alignment pins into the rear channel of your cabinet as shown in Figure 37 on page 46.
2. Extend the rail and align the front of the rails.
3. Insert two retention screws in the front and two retention screws in the back of each rail.

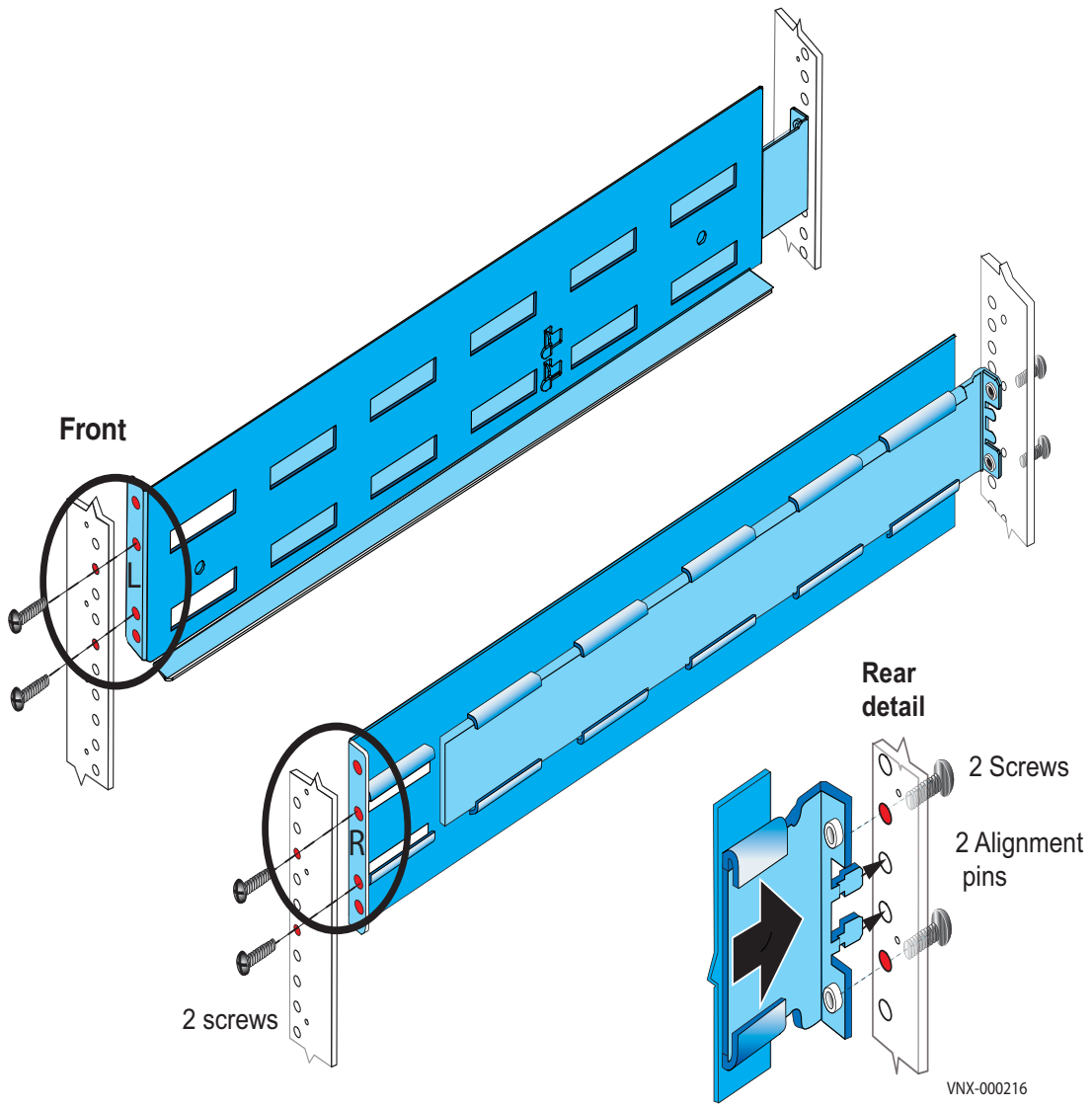


**Figure 37** Installing 3U DAE rails

## Install the DAE

1. Slide the DAE into the cabinet until the tabs on the rails are inserted into the component. Ensure that the enclosure is fully in the cabinet as shown in Figure 38. The rail stops in the back will seat into the back of the enclosure at the correct depth, and the front of the enclosure will be flush with the cabinet face.
2. Working in a diagonal pattern bottom left and top right, bottom right and top left, attach, but do not tighten, the component by inserting the four screws through the component, the cabinet and into the rail.
3. Repeat, as appropriate, with any other DAEs.
4. When the last DAE is attached, tighten all screws which hold the components in place.

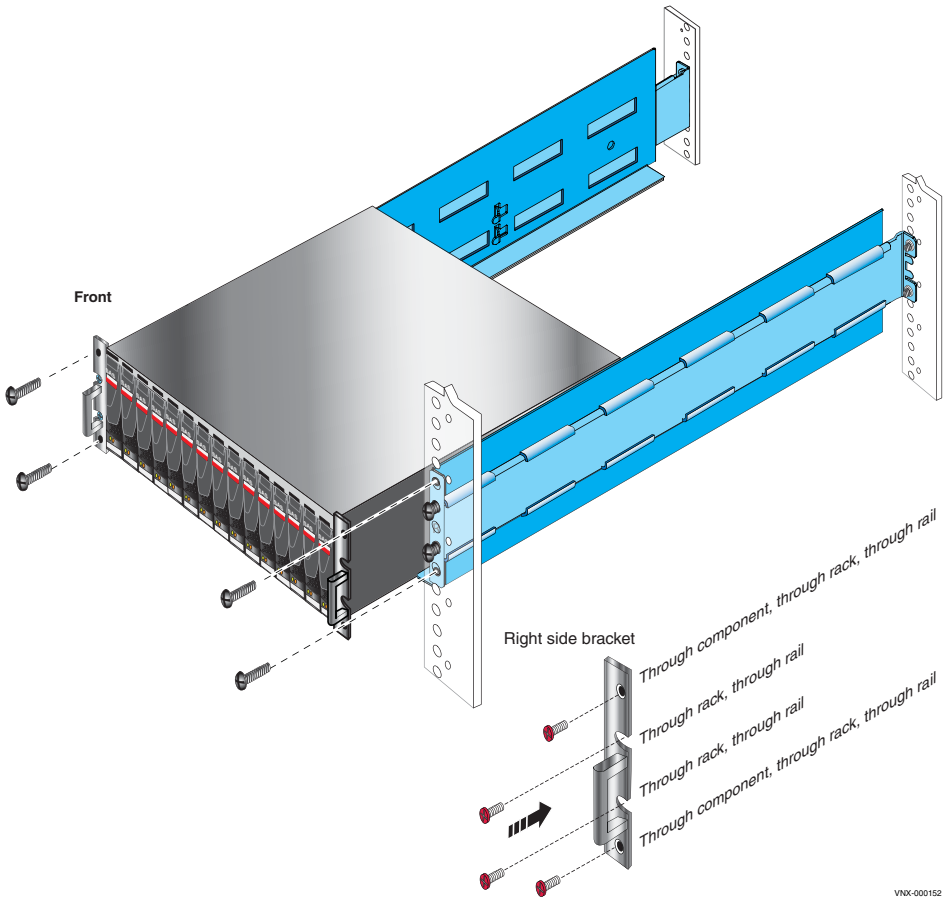


**Figure 38** Installing a 3U DAE in the cabinet

## Connect SAS DPE and DAE cables

In this example, two DAEs are being added. This example illustrates connecting one DAE to each of the ports available on the DPE. Each DAE has two Link Control Cards (LCC), designated A or B.

1. Locate one pair of cables for each DAE as shown in Figure 39.

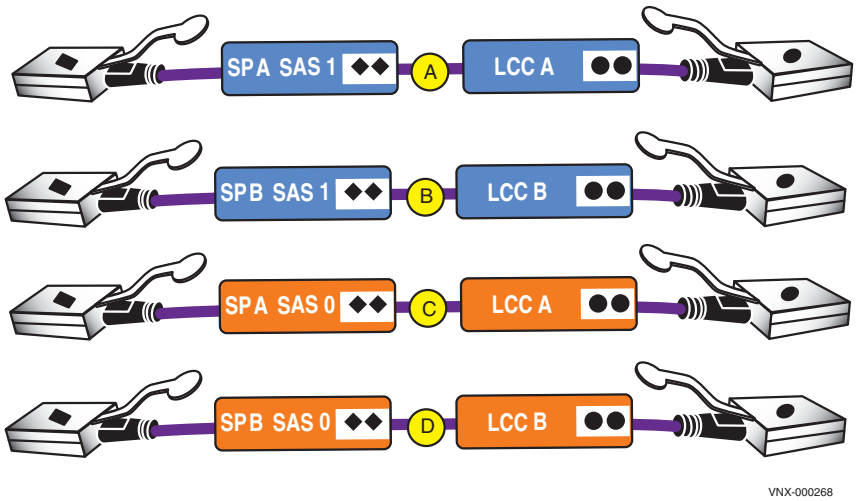


**Figure 39** SAS cables for thee first two DAEs

The SAS ports on the DPE are labeled 0 and 1. Port 0 is connected internally to the SAS expander that connects all the internal DPE disks. Since Port 0 is already connected internally to the DPE disks, the first DAE is connected to Port 1 to balance the load on the SAS ports. The second DAE is connected to Port 0.

---

**Note:** The *VNX5300 Hardware Information Guide* provides examples of how to cable DAEs in your VNX5300 for interleaved or stacked environments.

---

For steps 2 to 5, connect the following cables by matching the diamonds ◆◆ and ●● circles on the DAEs with the diamond ◆ and circle ● on the cable connectors as shown in Figure 39 on page 48 and Figure 40. Ensure the cables lock into place.

2. Connect SP A SAS 1 ◆◆ to DAE 1 LCCA ●●. (A)
3. Connect SP B SAS 1 ◆◆ to DAE 1 LCCB ●●. (B)
4. Connect SP A SAS 0 ◆◆ to DAE 2 LCCA ●●. (C)
5. Connect SP B SAS 0 ◆◆ to DAE 2 LCCB ●●. (D)

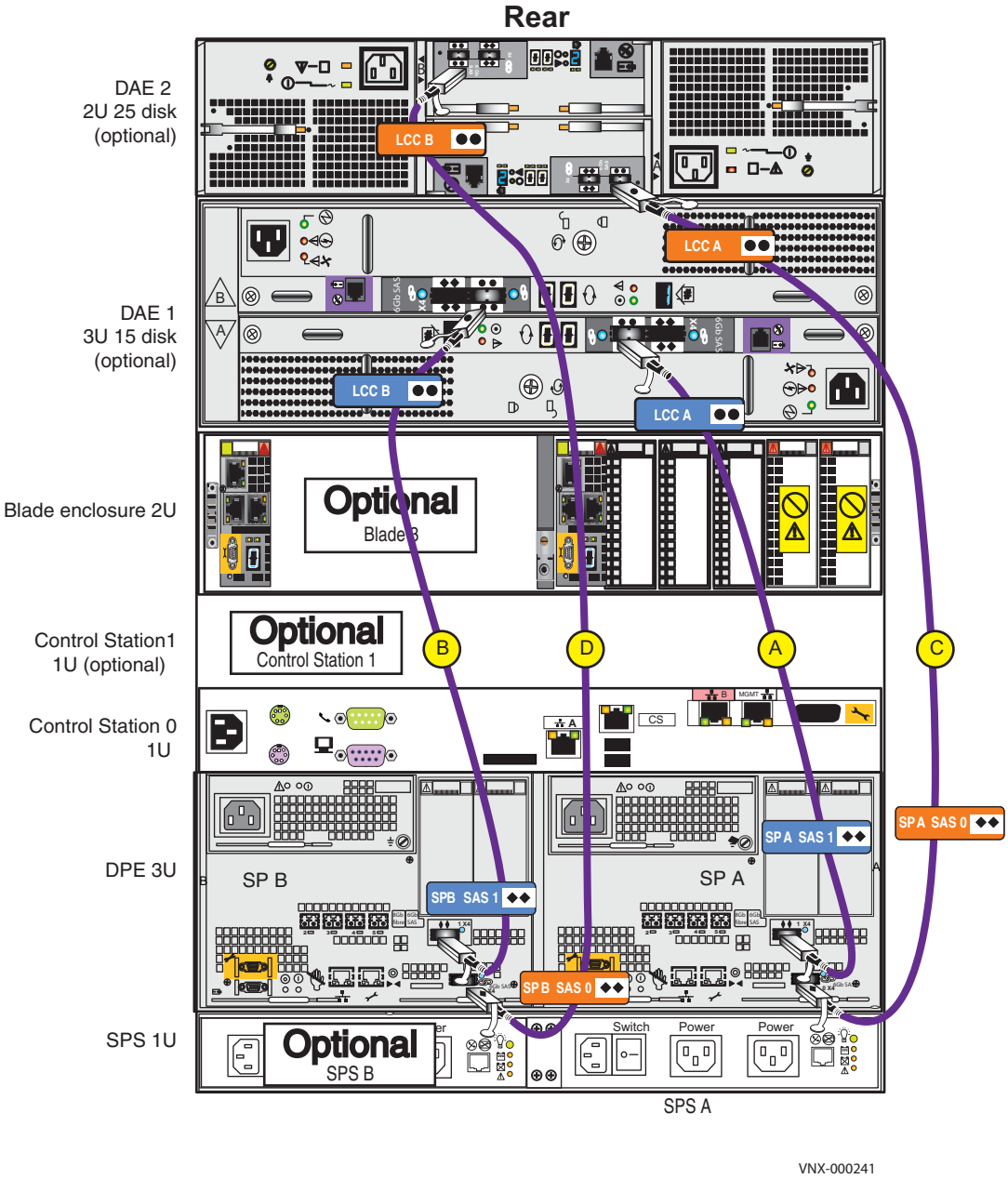


**Figure 40** Connecting SAS cables

# Power up the DAE

Ensure that the cabinet circuit breakers are still on and the PDUs are powered on. The DAE power cables should be connected directly to the PDUs as shown in Figure 41. After they are connected, the DAEs will begin to power up.

**Note:** Ensure cabinet receptacle power where the DAEs will be connected to is on.

1. Connect or verify that the DAE 1 power cable is connected to PDU A. (A)
2. Connect or verify that the DAE 1 power cable is connected to PDU B. (B)

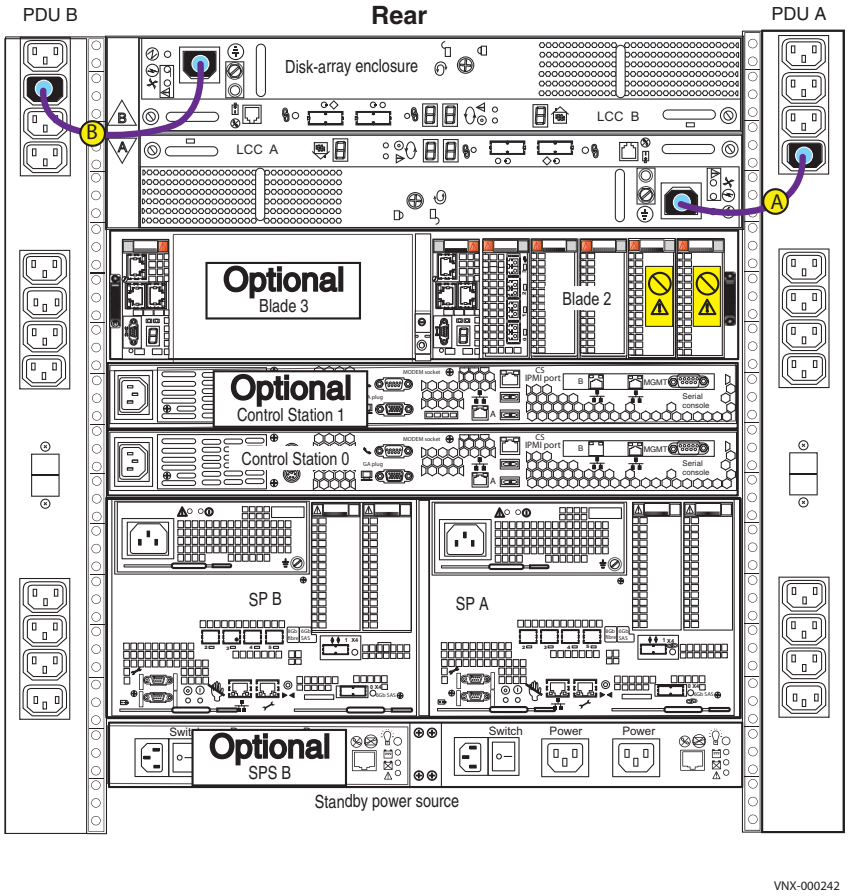


**Figure 41** Power up DAE

# Verify DAE status

The illustrations used here focus on the LEDs that you need to verify that the system powered up correctly. The *VNX5300 Hardware Information Guide* provides more details on all LEDs.

Table 5 lists the LEDs that you need to focus on to ensure that 3U and 2U DAEs powered up correctly.

**Table 5** 3U and 2U DAE LEDs

| LEDs | Location | State/Color | Description |
|---|---|---|---|
| DAE Fault/Status | Front | Off | OK |
| | | Amber | Fault has occurred |
| DAE Power | Front | On/Blue | OK |

## Verify 3U, 15 3.5'' drive DAE status

1. Verify that the status of a 3U DAE Power LED located on the front is solid blue and the DAE Fault/Status LED is off as shown in Figure 42.
2. If any fault LEDs are on, or if any power LEDs remain flashing, contact your authorized service provider.

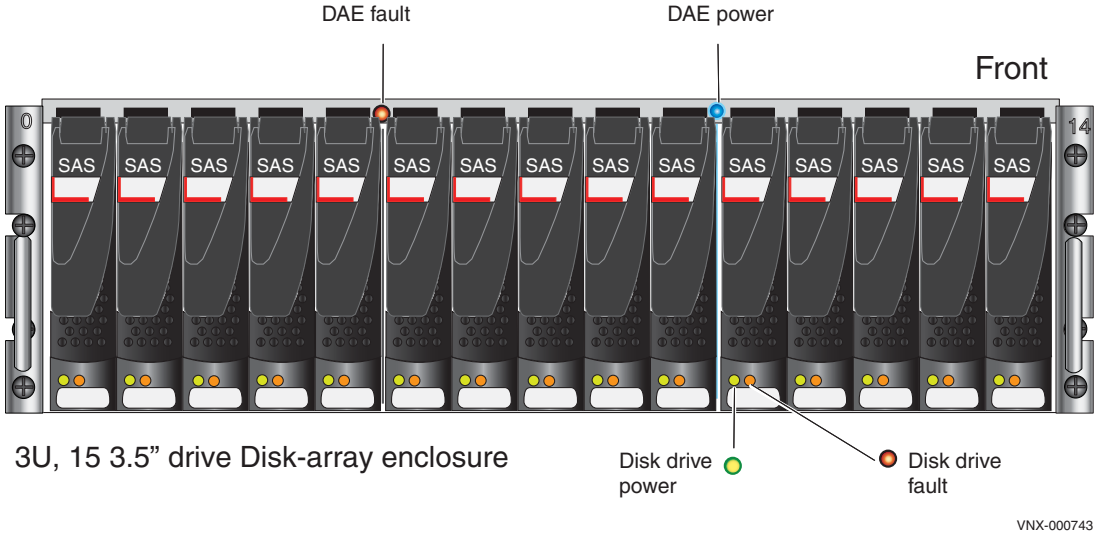


**Figure 42** 3U, 15 3.5'' drive DAE LEDs

## Verify 2U, 2.5" drive DAE status

1. Verify that the status of the 2U DAE Power LED located on the front is blue and the DAE Fault/Status is off as shown in Figure 43.
2. If any fault LEDs are on, or if any power LEDs remain flashing, contact your authorized service provider.

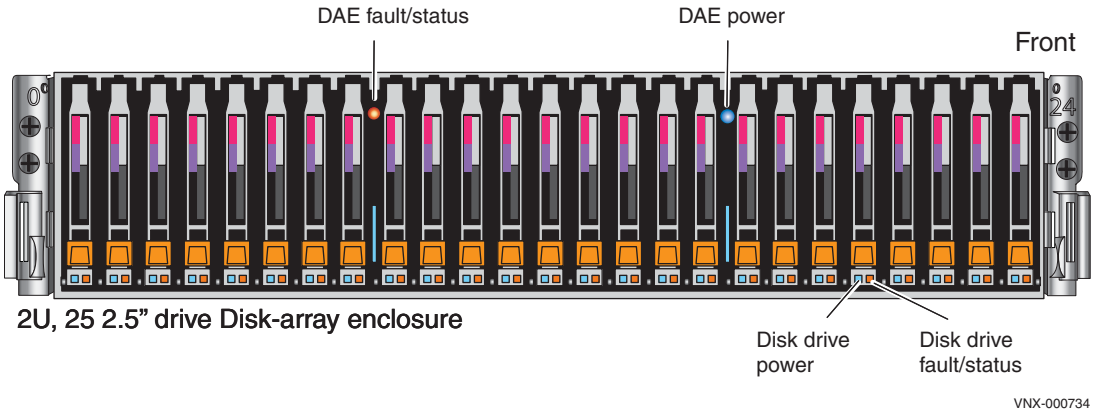


**Figure 43** 2U, 25 DAE front view

# Set up

After you have completed all of the installation steps, continue to set up your system by performing the post-installation tasks in this section.

## Connect a management station

You must connect a management station to your system directly or remotely over a subnetwork.

This computer will be used to continue setting up your system and must be on the same subnet as the storage system to complete the initialization.

*Setting up a Unisphere Management Station for the VNX series is* available on https://mydocs.emc.com/VNX/relatedDocs and provides information on different types of Unisphere management stations.

## Initialize your storage system

In the initialization phase of your storage system the VNX Installation Assistant (VIA) is used.

The VIA helps you to:

- Configure system settings for the Control Stations, storage array, and blades
- Set up ESRS support
- Check your cable connections

**IMPORTANT**

You will need the information from the "VNX File configuration worksheet" on page 59 and the "ESRS worksheet" on page 62 in the initialization process.

1. Download and install **VNX Installation Assistant for File/Unified** (VIA).

**Note:** EMC recommends that you use the version of this utility that matches the VNX File OE release; VIA is available on https://Support.EMC.com/VNX Series › Tools.

2. Launch VIA and select the **Install** option. The **Welcome** screen appears.
3. Click **Next**. The **Select Configuration Profile** screen appears.
4. From **Configuration Profile Name**, select **New Configuration**, and click **Next**.
5. VIA discovers the Primary Control Station MAC address over the public LAN. In a dual Control Station configuration, only the Primary Control Station broadcasts its MAC address.
6. Follow the online instructions to discover and assign IP addresses to your VNX system.
7. Continue to the **Remote support** screen. The ESRS option is selected by default.

**IMPORTANT**

ESRS support is recommended and preferred over Email Home. If you choose ESRS, you must select an ESRS option. ESRS on the Control Station is the recommended option. You will need the information from the "ESRS worksheet" on page 62.

8. If installing ESRS on an IP Client is preferred, perform the tasks described in the "Downloading ESRS documentation" section and the "Downloading ESRS IP Client" section on this page.
   - For more information and support on VIA, go to: https://mydocs.emc.com/VNX and click **Before you begin** to get a list of known issues and resolutions for VIA.
   - https://Support.EMC.com, click **Search Support** and enter the specific failure message into EMC Knowledgebase for possible resolution and corrective action for specific error messages that you may encounter.

If you encounter any issues during initialization:

- Go to https://mydocs.emc.com/VNX/and click **Before you begin** to read about known issues and problem.
- Go to https://Support.EMC.com, select **VNX Series**, click **Search Support**, and enter the specific failure message into the EMC Knowledgebase for possible resolution and corrective action.

## Downloading ESRS documentation

1. Go to https://mydocs.emc.com/VNX/.
2. Under **VNX tasks**, select **Initialize and register VNX and configure ESRS**.
3. Answer the questions about your configuration.
4. Select **Install and Configure ESRS** to generate a customized version of *EMC Secure Remote Support IP Client for VNX Requirements and Installation* document.

## Downloading ESRS IP Client

1. Go to https://Support.EMC.com and select **VNX Series › Install and Configure.**
2. From **VNX Installation Tools**, download **EMC Secure Remote Support IP Client**.
3. Install the ESRS.
4. Follow the wizard to set up the ESRS and test the ConnectHome process.

# Update the storage system software and register your system

The storage system comes pre-installed with the latest version of VNX Operating Environment (OE) software available at the time of shipment. The Unisphere Service Manager (USM) is a collection of tools that help you update, install, register, and maintain your system hardware and software. Use USM to check for and install an updated version of the VNX OE software and to register your storage system.

## Downloading USM documentation

1. Go to https://Support.EMC.com and download the *Unisphere Service Manager Requirements and Installation* document available on the VNX product page.
2. For additional information on using USM, go to https://mydocs.emc.com/VNX/.
3. Under **VNX tasks**, select **Update VNX software**.
4. Select appropriate settings for your configuration to generate a customized procedure.

## Downloading Unisphere Service Manager

1. Go to https://Support.EMC.com and select **VNX Series › Install and Configure**.
2. From **VNX Installation Tools**, download **Unisphere Service Manager**.
3. Save the executable to your management station.
4. From the folder where you downloaded the executable, double-click the file and follow the wizard's steps to install USM.
5. On the **Install Complete** screen, leave the **Launch Unisphere Service Manager** checkbox selected.
6. Click **Done**. Unisphere Service Manager opens.
7. Connect to your system by entering the host name or IP address and click **Connect**.

## Downloading the latest the VNX operating environment software

1. Select **Software › System Software**.
2. Run the **Prepare for Installation** wizard to check for an updated version of the VNX OE.
3. If available, then run the **Install Software** wizard to install the update.

## Registering your system with your service provider

1. Run the **Storage System Registration wizard** in Unisphere service Manager.
2. From within the USM, select **Register › Register Storage System**.
3. Follow the steps in the wizard to complete the registration process.

You can also use USM at this time to:

- Install and update Firmware
- Install language packs (if purchased)
- Install software enablers (if purchased)

# Check system health

Login to Unisphere to check the health of your system including alerts, event logs, and statistics.

1. Open a browser and enter the IP address of SP A.
2. Use the sysadmin credentials to log in to Unisphere. You may be prompted by certificate-related warnings. Accept all certificates as “Always Trust”.
3. Select your storage system and select **System** › **Monitoring and Alerts**.

# Configure servers for VNX systems

Go to https://mydocs.emc.com/VNX/ and from the Server tasks list select an appropriate task such as:

- Attach server
- Install or update server software for Block
- Add or replace hardware

# Attach bezels

When all of the components have been installed, all of the screws have been tightened, and all of the cables have been installed securely into the proper ports, return to the front of the site rack and select the correct bezel for each component and press the bezel into place on the front of the component.

1. Locate the bezels and the bezel keys for each installed component.
2. On the front of the rack or cabinet, position and align each bezel to the front-mounting brackets on the corresponding component.
3. Press the bezel into the handles until it clicks into place as shown in Figure 44 on page 57. Bezels have a lock built in to them, so you can opt to lock the bezels in place with the key provided.
4. Repeat steps 2 and 3 for the remaining bezels.

**⚠CAUTION**

**Ensure that you install the 1U front bezel on the Control Station. The 1U front bezel for the Control Station has a lock on the front of the bezel and is labeled 1U bezel on the back of the bezel.**

***Do not*** **install the 1U filler panel. The 1U filler panel does not have a lock on the front of the bezel and is labeled 1U filler on the back of the filler panel. The 1U bezel has inlets on the bezel all the way through the bezel to allow cooling air to be drawn through the front and circulated to the Control Station.**

**If airflow through the rack and the Control Station that occupy it is blocked or restricted, or if the ambient air being drawn into the rack is too warm, an overtemperature condition within the rack and the Control Station that occupies it can occur causing the Control Station to fail.**

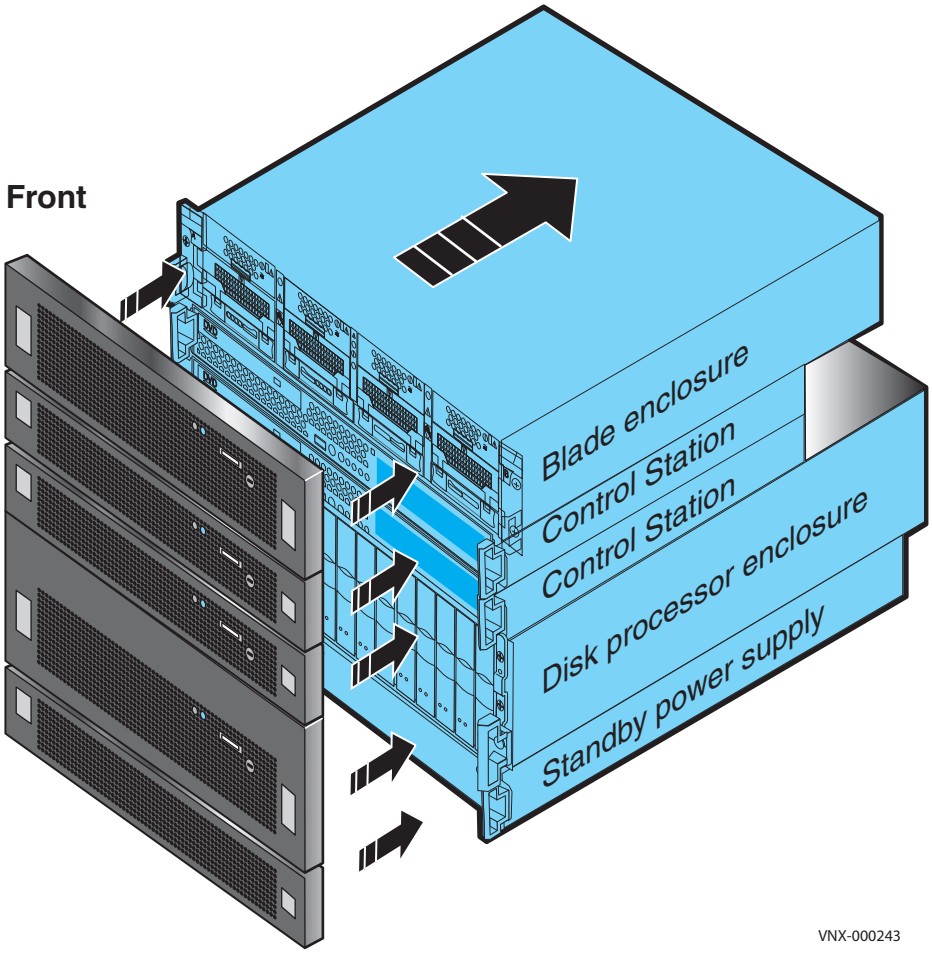


**Figure 44** Front bezels

# Planning Worksheets

## VNX File configuration worksheet

With your network administrator, determine the IP addresses and network parameters you plan to use with the storage system, and record the information on the following worksheet. You must have this information to set up and initialize the system.

You manage the storage system through a dedicated LAN port on each storage processor. These ports must share a subnet with the host you use to initialize the system. After initialization, any host on the same network and with a supported browser can manage the system through the management ports.

Record network information for your system on the worksheets on the next pages. Your network administrator should provide most of this information. For more information, refer to your configuration planning guide.

To download the latest version of the VNX Installation Assistant for File/Unified, go to the https://support.EMC.com and select **Support**. Search for VNX Installation Assistant.

**IMPORTANT**

The VNX Installation Assistant for File/Unified auto-discovers and pre-populates certain values based on the system and network environment of your Windows client. Ensure you verify and fill these values in to the Value column by recording the results of the auto-discovery.

**Table 6** Control Station public LAN settings

| Field | Value | Comments |
|---|---|---|
| CS0 Primary hostname | | |
| CS1 Secondary hostname | | |
| CS0 Primary IP address | | If you want to configure IPv6 addresses for the Control Station address, use the VNX Installation Assistant for File/Unified for the initial installation, and then refer to the *Configuring and Managing Networking on VNX* technical module and the *EMC VNX Command Line Interface Reference for File* to complete the IPv6 additions. |
| CS1 Secondary IP address | | |
| Netmask | | Auto-discovered (required). Enter this information into the Value column of this table. |
| Gateway | | Auto-discovered (required). Enter this information into the Value column of this table. |
| DNS domain | | Auto-discovered (required). Enter this information into the Value column of this table. |

**Table 6** Control Station public LAN settings (continued)

| Field | Value | Comments |
|---|---|---|
| Primary DNS server | | Auto-discovered (optional). Enter this information into the Value column of this table. |
| Secondary DNS server | | Auto-discovered (optional). Enter this information into the Value column of this table. |
| NTP server | | As a Best Practice, EMC recommends that your Control Stations be configured with the Network Time Protocol (NTP) service.<br>The NTP service will be automatically configured on the Control Station if you select this box in the GUI. |
| Time Zone | | Required |

**Table 7** Public IP addresses for SP A and SP B

| Field | Value | Comments |
|---|---|---|
| SP A IP Address | | Type the public IP addresses for the storage processors (SP) you want to use to communicate with the VNX from the public network. These IP addresses must be on the same subnet as the Control Station IP address and should not be in use by any other host on the network. |
| SP B IP Address | | |

**Table 8** Passwords

| Field | Value | Comments |
|---|---|---|
| root password | nasadmin (default) | Passwords are default factory values and should be changed as soon as possible for security reasons.<br>Passwords can be changed during the VNX Installation Assistant for File/Unified installation process or from within Unisphere. |
| nas admin password | nasadmin (default) | |

**Table 9** Blade public LAN settings

| Field | Value | Comments |
|---|---|---|
| DNS domain | | Auto-discovered (required). These settings apply to all primary blades.<br>If you want to configure the IPv6 addresses for the blades (DNS or NTP), first use the VNX Installation Assistant for File/Unified for the initial installation and then refer to the Configuring and Managing Networking on VNX technical module and *EMC VNX Command Line Interface Reference for File* to complete the IPv6 additions.<br>**Note:** The values auto-discovered for the secondary DNS server are optional. |
| Primary DNS server | | |

**Table 10** Service Provider/Customer Notification

| Field | Value | Comments |
|---|---|---|
| Email Server | | Optional<br>Email will not work without a DNS server. |
| Site Information: | | |
| Recipient Email Addresses | | Optional |
| Site ID | | Optional (third-party name) |
| Dial-in-Modem # | | Optional<br>This is the local number that is used by the service provider to dial into your system. |

**Table 11** Licenses

| Field | Value | Comments |
|---|---|---|
| — | ☐ CIFS (Windows) | Required<br>Check the boxes of the licenses you have purchased. |
| — | ☐ NFS (UNIX or Linux) | |
| — | ☐ Replicator V2 | |
| — | ☐ File Level Retention | |
| — | ☐ Snapsure | |

# ESRS worksheet

The following information is required to set up EMC Secure Remote Support IP Client.

**Table 12** Content required for ESRS setup

| Field | Description | Value |
|---|---|---|
| **VNX System or Off-Array Navisphere/Unisphere Manager** | The system IP address or the host name of a workstation running Unisphere Manager (Off-Array) | |
| **Unisphere Manager Login Username** | Global username with administrative privileges | |
| **Unisphere Manager Login Password** | Global username password | |
| **SMTP Server IP address or host name** | If your ESRS IP Client installation will use the optional email notification as a backup communication method for the Call Home feature, you will need connectivity to an outgoing SMTP server. You must provide the IP address for the SMTP server. | |
| **Email address (optional)** | You provide your email address for email notification. | |
| **Email server address (optional)** | You provide the email server to notify EMC of serious events. | |
| **Customer Information** | Only used for systems that are NOT going to be configured with ESRS Device Client solution. The ESRS Device Client solution is the primary and recom-mended CallHome solution for the unified/file VNX systems. | |
| Site ID (optional) | | |
| Dial-in Modem # (optional) | | |
| **Proxy Server Settings** | If the monitor station connects to the Internet through a proxy server, you must indicate this during the ESRS IP Client installation and provide the IP address, port, and protocol (HTTPS or SOCKS) for the proxy server. | |
| Proxy Server IP address or network name | | |

**Table 12** Content required for ESRS setup

| Field | Description | Value |
|---|---|---|
| Protocol to be used (HTTP or SOCKS) | | |
| Port number of the proxy server | | |
| Proxy server login credentials<br>Username<br>Password | You must provide login credentials for the proxy server. You must provide both the username and password for authentication. | |
| **Role**<br>Username<br>Password<br><br>or,<br><br>FOB/RSA for Username and Password | You must provide Powerlink credentials.<br><br>If you select the **A Customer system Administrator at this site** option, you must provide both the username and password for authentication for Powerlink.<br><br>If you select the **An Authorized Service Provider** option, you must use your FOB/RSA SecurID credentials for the username/password. | |
| **CallHome (back up)** | ESRS is the primary communication method for the Call Home feature. Use email as a backup communication method for the Call Home feature. | |
| Email server | | |
| Email address | | |
| **Policy Manager Configuration (optional)** | If the Policy Manager is configured, provide the host IP address, port, and protocol (HTTPS or SOCKS) for the proxy server. | |
| Host IP address | | |
| Port number of the proxy server | | |
| Protocol to be used (HTTP or SOCKS) | | |
| **Proxy server login credentials for Policy Manager**<br>Username<br>Password | You must provide login credentials for the proxy server. You must provide both the username and password for authentication. | |

EMC²®