Brocade® G620 Switch Hardware Installation Guide

Installation Guide
19 April 2021

Table of Contents

Copyright Statement

Introduction

About This Document

This hardware installation guide contains procedures and safety requirements for installing the Brocade® G620 Switch into a rack system or as a stand-alone device. Also provided are steps to initially configure the switch for operation, verify and monitor operation, replace switch field-replaceable units (FRUs), and install transceivers and cables. Complete technical specifications for the switch are also included.

Supported Hardware and Software

The Brocade G620 FC Switch is introduced in the Fabric OS® (FOS) 8.0.0 software release. The following tables list the switch types, the power supply assemblies, the fan assemblies, and the rack mount kits supported on this device.

Table 1: Brocade G620-1 and G620-2 Switches

Switch Type	Description; Switch Type	Introduced (OS)	Currently Supported (OS)
162	G620-1	Fabric OS 8.0.0	Fabric OS 8.x, Fabric OS 9.x
183	G620-2	Fabric OS 9.0.0	Fabric OS 9.x

NOTE
To obtain the switchType, use the `switchShow` command.

NOTE

- Fabric OS 8.x refers to any supported release within the 8.x generation of Fabric OS.
- Fabric OS 9.x refers to any supported release within the 9.x generation of Fabric OS.

Table 2: Power Supply and Fan Assemblies

Part Number	Description	Introduced (OS)	Currently Supported (OS)
XBR-G250WPSAC-F	250W AC power supply with nonport-side exhaust airflow	Fabric OS 8.0.0	Fabric OS 9.x
XBR-G250WPSAC-R	250W AC power supply with nonport-side intake airflow	Fabric OS 8.0.0	Fabric OS 9.x
XBR-G250WPSDC-R	250W DC power supply with nonport-side intake airflow	Fabric OS 9.0.1	Fabric OS 9.x

Table 3: Rack Mount Kits

Part Number	Description
XBR-R000294	Universal two-post mid-mount or flush-mount rack kit
XBR-R000296	Universal four-post fixed rack mount kit

The following table differentiates between the Brocade G620 Switch operating under FOS 8.0.0 and 9.0.0.

Table 4: Brocade G620 Switch Operating in FOS 8.0.0 and 9.0.0

Hardware	G620-1	G620-1
switchType	162	183
Minimum FOS Level	8.0.0	9.0.0
Number of LEDs per QSFP port	4 LEDs per QSFP port (that is, 1 LED per QSFP channel) (Port status LEDs for QSFP ports behave the same as for SFP+ ports)	1 LED per QSFP port (i.e. 1 LED per 4 channels of QSFP) For details, refer to QSFP Port Status LEDs.
Console Port	RJ-45	Mini-USB

Notes, Cautions, and Danger Notices

Notes, cautions, and danger statements may be used in this document.

NOTE
A Note provides a tip, guidance, or advice, emphasizes important information, or provides a reference to related information.

CAUTION
A Caution statement alerts you to situations that can be potentially hazardous to you or cause damage to hardware, firmware, software, or data.

DANGER
A Danger statement indicates conditions or situations that can be potentially lethal or extremely hazardous to you. Safety labels are also attached directly to products to warn of these conditions or situations.

Contacting Technical Support for Your Brocade® Product

For product support information and the latest information on contacting the Technical Assistance Center, go to https://www.broadcom.com/support/fibre-channel-networking/. If you have purchased Brocade® product support directly from Broadcom, use one of the following methods to contact the Technical Assistance Center 24x7.

Online	Telephone
For nonurgent issues, the preferred method is to log in to myBroadcom at https://www.broadcom.com/mybroadcom. (You must initially register to gain access to the Customer Support Portal.) Once there, select **Customer Support Portal** > **Support Portal**. You will now be able to navigate to the following sites: • **Knowledge Search**: Clicking the top-right magnifying glass brings up a search bar. • **Case Management**: The legacy MyBrocade case management tool (MyCases) has been replaced with the Fibre Channel Networking case management tool. • **DocSafe**: You can download software and documentation. • **Other Resources**: Licensing Portal (top), SAN Health (top and bottom), Communities (top), Education (top).	Required for Severity 1 (critical) issues: Please call Fibre Channel Networking Global Support at one of the numbers listed at https://www.broadcom.com/support/fibre-channel-networking/.

If you purchased Brocade product support from a Broadcom OEM/solution provider, contact your OEM/solution provider for all your product support needs.

- OEM/solution providers are trained and certified by Broadcom to support Brocade products.
- Broadcom provides backline support for issues that cannot be resolved by the OEM/solution provider.
- Brocade Supplemental Support augments your existing OEM support contract, providing direct access to Brocade expertise. For more information on this option, contact Broadcom or your OEM.
- For questions regarding service levels and response times, contact your OEM/solution provider.

Document Feedback

Quality is our first concern. We have made every effort to ensure the accuracy and completeness of this document. However, if you find an error or an omission or if you think that a topic needs further development, we want to hear from you. Send your feedback to documentation.pdl@broadcom.com. Provide the publication title, publication number, topic heading, page number, and as much detail as possible.

Device Overview

Hardware Features

The Brocade G620 Switch offers the following features and capabilities:

- Up to 48 autosensing ports supporting high-performance 32G SFP+ ports technology in a single domain.
- Up to four 128G (4 x 32G) QSFP ports.
- Dynamic Ports on Demand (Dynamic-POD) scaling from a base configuration of 24 ports to 64 ports (two 12-port SFP + PODs and one 16-port QSFP POD).
- 4, 8, 16, and 32G autosensing Fibre Channel switch; and router ports.
  - A 32G optical transceiver can autonegotiate to 8G, 16G, or 32G.
  - A 16G optical transceiver can autonegotiate to 4G, 8G, or 16G.
  - A 10G optical transceiver can autonegotiate to 10G.

    NOTE
    The port speed is determined by the maximum speed that is supported by the optical transceiver at the other end of the link.
- 10G manually set capability on FC ports (requires the optional 10-Gigabit FCIP/Fibre Channel license).
  - 10G performance is enabled by 10G SFP+ transceivers.
  - Ports can be configured for 10G for metro connectivity.
- Universal ports self-configure as E_Ports, F_Ports, N_Ports, or D_Ports. EX_Ports can be activated on a per-port basis with the optional Integrated Routing license.
  - A Diagnostic Port (D_Port) provides diagnostics, troubleshooting, and verification services for the physical media.
- In-flight data compression and encryption provide efficient link utilization and security. Up to four ports can be enabled with compression, encryption, or both.
- Support for port-side exhaust or nonport-side exhaust airflow for cooling.
- Hardware-enabled input and output (I/O) latency statistics collection.
- Hardware-enabled VM support.
- Brocade small form-factor pluggable plus (SFP+) optical transceivers support any combination of short wavelength (SWL), long wavelength (LWL), or extended long wavelength (ELWL) optical media among the switch ports.
- Extended distance Fibre Channel to support long-distance native FC connectivity.
- 10G Fibre Channel integration on any selected port provides DWDM metro connectivity on the same switch.
- Port-to-port latency minimized to the following values by using cut-through frame switching at 32G.

  - G620 (Switch Type 162) = 780ns (including FEC)
  - G620 (Switch Type 183) = 560ns (including FEC)
- A High-performance T1022 processor with two cores operating at 1.2 GHz delivers high performance, scalability, and advanced Fabric Vision functionality.
- One 1000/100/10Mb/s RJ-45 connector for the Ethernet management connection. In conjunction with EZSwitchSetup, this port supports switch IP address discovery and configuration, eliminating the need to attach a serial cable to configure the switch IP address.
- One internal e-USB module provides 2 GB of persistent storage, increased serviceability, and error logging functionality by facilitating easier firmware upgrades and downloads of the system log files.
- One external USB connector.
- Two hot-swappable redundant integrated power supply and fan assembly field-replaceable units.
- 48 hot-pluggable SFP+ optical transceiver slots and 4 hot-pluggable QSFP optical transceiver slots.
- 52 bicolor (green/amber) LEDs to indicate the status for each port (one per SFP+ and one for each QSFP slot). (In the G620 (Switch Type 183), the QSFP LEDs are tri-color.)
- One green LED to indicate valid system power.
- One bicolor (green/amber) LED to indicate the system status.
- Two Ethernet LEDs: one green LED to indicate link speed of 1000/100/10Mb/s and one green LED to indicate activity.
- SEEPROM for switch identification.
- Real-time power monitoring.
- Real-time voltage monitoring.
- Real-time fan monitoring including airflow direction.
- Real-time digital thermometers for temperature monitoring.
- Real-time clock (RTC) with battery.

License Options

The Brocade G620 uses a capacity-based Ports on Demand (POD) license method. An Integrated Routing (IR) license is required to enable EX_Ports on this device. Refer to the *Brocade Fabric OS Software Licensing Guide* for more details.

Port-Side View

The following illustration shows the port-side view of the Brocade G620 (Switch Type 162) Fibre Channel switch.

Figure 1: Port-Side View of G620 (Switch Type 162)

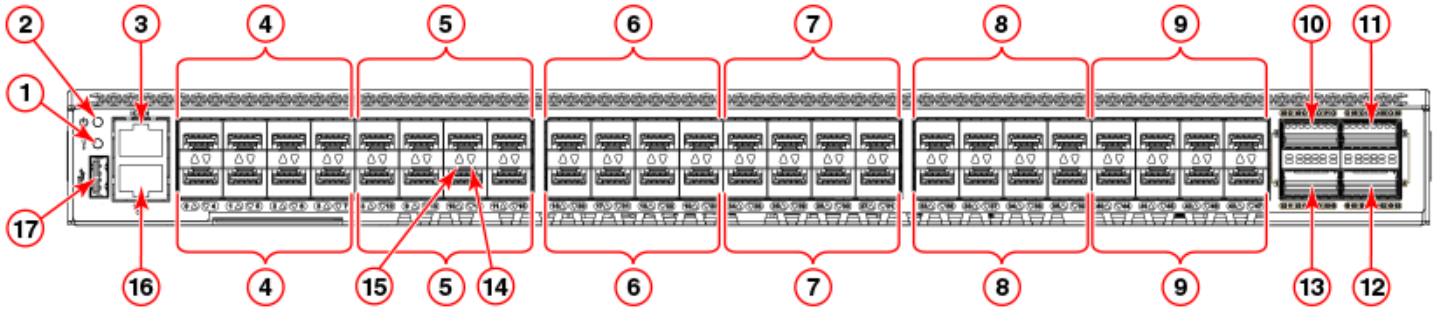

1. System Status LED
2. System Status LED
3. UART RJ-45 Serial Console Port
4. SFP+ FC (four upper and four lower) Ports 0–7
5. SFP+ FC (four upper and four lower) Ports 8–15

6. SFP+ FC (four upper and four lower) Ports 16–23
7. SFP+ FC (four upper and four lower) Ports 24–31
8. SFP+ FC (four upper and four lower) Ports 32–39
9. SFP+ FC (four upper and four lower) Ports 40–47
10. QSFP Port 0 (FC Ports 48–51)
11. QSFP Port 2 (FC Ports 56–59)
12. QSFP Port 3 (FC Ports 60–63)
13. QSFP Port 1 (FC Ports 52–55)
14. SFP+ (lower) Port 14 Status LED
15. SFP+ (upper) Port 10 Status LED
16. 1000/100/10Bb/s RJ-45 Ethernet Management Port
17. USB Port

The following illustration shows the port-side view of the Brocade G620 (Switch Type 183) Fibre Channel switch.

Figure 2: Port-Side View of G620 (Switch Type 183)

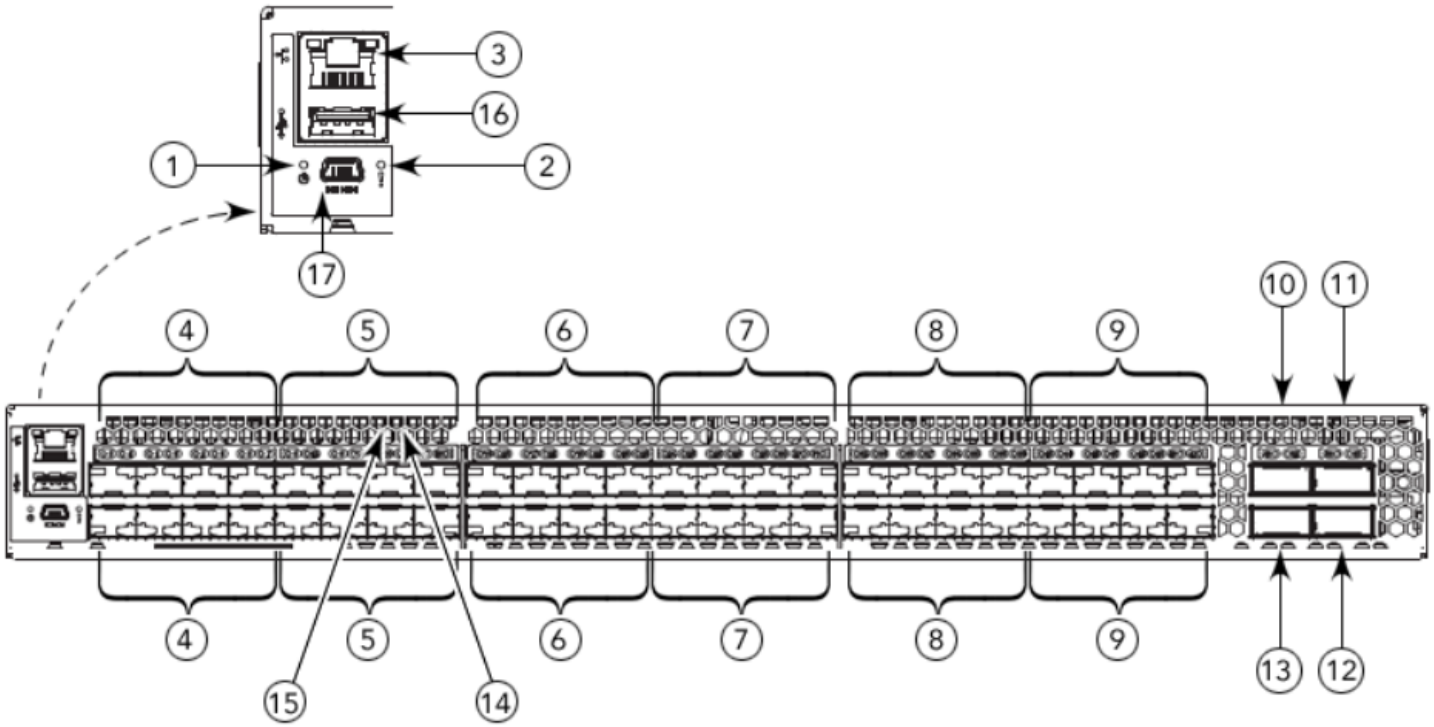

1. System Power LED
2. System Status LED
3. Management Ethernet Port
4. SFP+ FC (four upper and four lower) Ports 0–7
5. SFP+ FC (four upper and four lower) Ports 8–15
6. SFP+ FC (four upper and four lower) Ports 16–23
7. SFP+ FC (four upper and four lower) Ports 24–31
8. SFP+ FC (four upper and four lower) Ports 32–39
9. SFP+ FC (four upper and four lower) Ports 40–47
10. QSFP Port 0 (FC Ports 48–51)

11. QSFP Port 2 (FC Ports 56–59)
12. QSFP Port 3 (FC Ports 60–63)
13. QSFP Port 1 (FC Ports 52–55)
14. SFP+ (lower) Port 14 Status LED
15. SFP+ (upper) Port 10 Status LED
16. USB Port
17. UART mini-USB Serial Console Port

NOTE
All the ports are connected to a single ASIC.

Nonport-Side View

The following illustrations show the nonport-side view of the Brocade G620 FC Switch.

Figure 3: Nonport-Side View with AC Power Supply and Fan Assembly Units

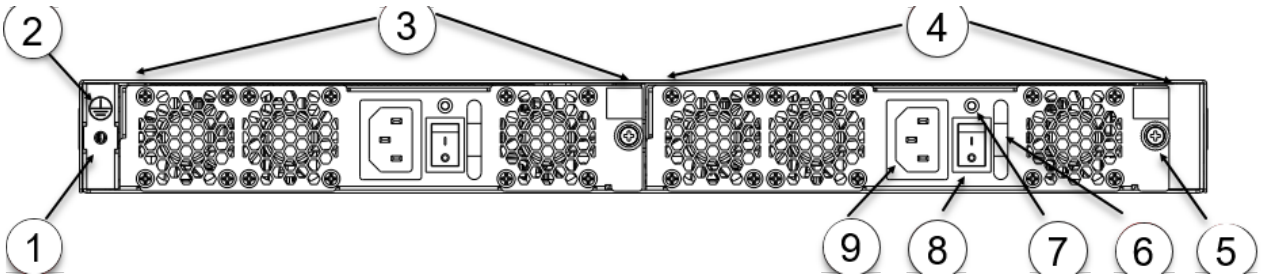

1. #6-32 for Screw Mounting of the Ground Cable
2. Ground Marking
3. Power Supply and Fan Assembly 2
4. Power Supply and Fan Assembly 1
5. Captive Screw
6. Handle
7. Power Supply and Fan Assembly Status LED
8. Power-On/Off Switch
9. Power Supply Receptacle

Figure 4: Nonport-Side View with DC Power Supply and Fan Assembly Units

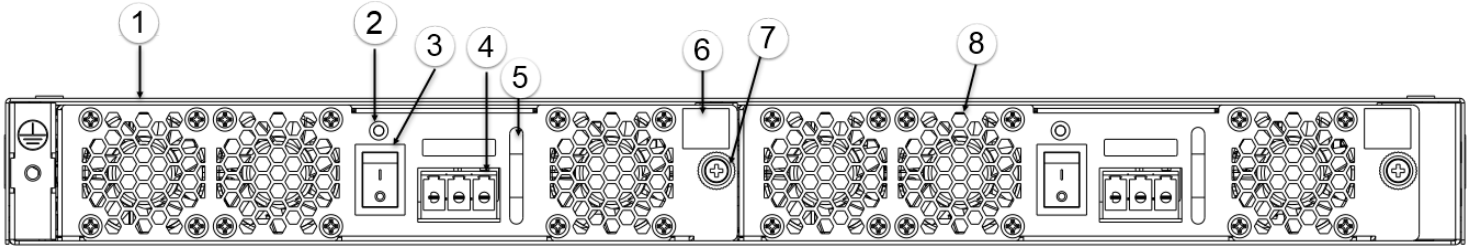

1. Power Supply and Fan Assembly 2
2. Power Supply and Fan Status LED
3. Power-On/Off Switch
4. Power Cord Receptacle
5. Handle
6. Airflow Label

7. Captive Screw
8. Power Supply and Fan Assembly 1

Device Management Options

You can use the management functions built into the device to monitor the fabric topology, port status, physical status, and other information to help you analyze switch performance and to accelerate system debugging. The device automatically performs a power-on self-test (POST) each time it is turned on. A RASlog message is generated for any detected startup errors.

You can manage the device using any of the management options that are listed in the following table.

Table 5: Management Options for the Device

Management Tool	Out-of-Band Support	Reference Documents
Command line interface (CLI) Up to two admin sessions and four user sessions simultaneously.	Ethernet or serial connection	*Brocade Fabric OS Administration Guide* *Brocade Fabric OS Command Reference Manual*
Brocade EZSwitchSetup EZSwitchSetup helps to complete the basic configuration for single-switch setup.	Ethernet or serial connection	*Brocade® EZSwitchSetup User Guide*
Brocade Web Tools	Ethernet or serial connection	*Brocade Fabric OS Web Tools Administration Guide*
Standard SNMP applications	Ethernet or serial connection	*Brocade Fabric OS MIB Reference Manual*
Management Server	Ethernet or serial connection	*Brocade Fabric OS Administration Guide* *Brocade Fabric OS Command Reference Manual*
Brocade SANnav Brocade SANnav must be purchased separately.	Ethernet or serial connection	Brocade SANnav™ documentation set

Preparing for Installation

Safety Precautions

When using this product, observe all danger, caution, and attention notices in this manual. The safety notices are accompanied by symbols that represent the severity of the safety condition.

See "Cautions and Danger Notices" for translations of safety notices for this product.

General Precautions

DANGER
The procedures in this manual are for qualified service personnel.

DANGER
Before beginning the installation, see the precautions in “Power Precautions.”

DANGER
Be careful not to accidently insert your fingers into the fan tray while removing it from the chassis. The fan may still be spinning at a high speed.

CAUTION
Changes or modifications made to this device that are not expressly approved by the party responsible for compliance could void the user's authority to operate the equipment.

CAUTION
Disassembling any part of the power supply and fan assembly voids the warranty and regulatory certifications. There are no user-serviceable parts inside the power supply and fan assembly.

CAUTION
Make sure the airflow around the front and back of the device is not restricted.

CAUTION
Ensure that the airflow direction of the power supply unit matches that of the installed fan tray. The power supplies and fan trays are clearly labeled with either a green arrow with an "E" or an orange arrow with an "I."

CAUTION
Never leave tools inside the chassis.

CAUTION
To protect the serial port from damage, keep the cover on the port when not in use.

CAUTION
If you do not install a module or a power supply in a slot, you must keep the slot filler panel in place. If you run the chassis with an uncovered slot, the system will overheat.

CAUTION
Do not install the device in an environment where the operating ambient temperature might exceed 40°C (104°F).

ESD Precautions

DANGER
For safety reasons, the ESD wrist strap should contain a series 1 megaohm resistor.

CAUTION
Before plugging a cable into any port, be sure to discharge the voltage stored on the cable by touching the electrical contacts to ground surface.

CAUTION
Static electricity can damage the chassis and other electronic devices. To avoid damage, keep static-sensitive devices in their static-protective packages until you are ready to install them.

NOTE
Wear a wrist grounding strap connected to the chassis ground (if the device is plugged in) or to a bench ground.

Power Precautions

DANGER
Make sure that the power source circuits are properly grounded, and then use the power cord supplied with the device to connect it to the power source.

DANGER
If the installation requires a different power cord than the one supplied with the device, make sure you use a power cord displaying the mark of the safety agency that defines the regulations for power cords in your country. The mark is your assurance that the power cord can be used safely with the device.

DANGER
This device might have more than one power cord. To reduce the risk of electric shock, disconnect all power cords before servicing.

DANGER
Remove both power cords before servicing.

DANGER
Disconnect the power cord from all power sources to completely remove power from the device.

DANGER
To avoid high voltage shock, do not open the device while the power is on.

DANGER
Batteries used for RTC/NVRAM backup are not located in operator-access areas. There is a risk of explosion if a battery is replaced by an incorrect type. Dispose of used components with batteries according to local ordinance and regulations.

CAUTION
Use a separate branch circuit for each power cord, which provides redundancy in case one of the circuits fails.

CAUTION
Ensure that the device does not overload the power circuits, wiring, and over-current protection. To determine the possibility of overloading the supply circuits, add the ampere (amp) ratings of all devices installed on the same circuit as the device. Compare this total with the rating limit for the circuit. The maximum ampere ratings are usually printed on the devices near the input power connectors.

CAUTION
The power supply switch must be in the off position when you insert the power supply into the chassis. Damage to the switch can result if a live power supply is installed.

CAUTION
Carefully follow the mechanical guides on each side of the power supply slot and make sure the power supply is properly inserted in the guides. Never insert the power supply upside down.

NOTE
Device control processors and management modules may contain batteries for RTC or NVRAM backup. Dispose of components containing batteries as required by local ordinances and regulations.

Lifting and Weight-Related Precautions

DANGER
Use safe lifting practices when moving the product.

DANGER
Mount the devices you install in a rack as low as possible. Place the heaviest device at the bottom and progressively place lighter devices above.

DANGER
Make sure the rack housing the device is adequately secured to prevent it from becoming unstable or falling over.

CAUTION
Do not use the port cover tabs to lift the module. They are not designed to support the weight of the module, which can fall and be damaged.

CAUTION
To prevent damage to the chassis and components, never attempt to lift the chassis using the fan or power supply handles. These handles were not designed to support the weight of the chassis.

Laser Precautions

DANGER
All fiber-optic interfaces use Class 1 lasers.

DANGER
Use only optical transceivers that are qualified by Broadcom and comply with the FDA Class 1 radiation performance requirements defined in 21 CFR Subchapter I, and with IEC 60825 and EN60825. Optical products that do not comply with these standards might emit light that is hazardous to the eyes.

Facility Requirements

Before installing the device, be sure that the following facility requirements are met.

Table 6: Facility Requirements

Type	Requirements
Electrical	• Adequate supply circuit, line fusing, and wire size, as specified by the electrical rating on the switch nameplate. • Circuit protected by a circuit breaker and grounded in accordance with local electrical codes. See the technical specifications at the end of this guide for complete power supply specifications.
Thermal	• A minimum airflow of 79.8 cubic meters/hour (47 cubic ft/min.) available in the immediate vicinity of the switch. Although this airflow may exceed the airflow maximum that is listed in the device technical specifications, the additional airflow is recommended to pressurize the inlet (cool isle) side of rack installations relative to the exhaust side to minimize recirculation of hot air back to the inlet side. • Ambient air temperature not exceeding 40°C (104°F) while the switch is operating.
Rack (when rack-mounted)	• One rack unit (1U) in a 48.3 cm (19 in.) rack. • All equipment in the rack grounded through a reliable branch circuit connection. • The additional weight of the switch must not exceed the rack's weight limits. • Rack secured to ensure stability in case of unexpected movement.

Quick Installation Checklist

The following checklists provide a high-level overview of the basic installation process from the planning stage to the point where the device comes online and it is ready to be deployed. Completing all the tasks in the suggested order ensures successful installation. Print these checklists and take them to the installation site.

Preinstallation Tasks

Review all installation requirements ahead of time as part of your site preparation. Careful planning and site preparation ensure seamless installation, especially when installing multiple devices.

Table 7: Installation Prerequisites

Task	Task Details or Additional Information	Completed
Unpack the device.	Take an inventory of the hardware components included in your shipment. See Shipping Carton Contents.	
Gather necessary components and required tools.	Review the time and items that are required at the beginning of each chapter to ensure that you have gathered all necessary components that are required for the following installation tasks: • Mounting the Device • Installing Transceivers and Cables • Power Supply and Fan Assembly	
Review the safety precautions.	See Safety Precautions. For translations, see Cautions and Danger Notices at the end of this guide.	
Plan the installation.	Decide whether you want to install the unit on a flat surface or in a rack. For rack installation, obtain the appropriate rack mount kit. See Mounting Options.	
Review and verify installation requirements.	Verify that the following requirements are met. See Facility Requirements. • Power requirements • Environmental requirements • Clearance for stand-alone or rack installation	

Task	Task Details or Additional Information	Completed
Gather network configuration parameters.	• IP address: • Subnet mask: • Default gateway: • Domain ID: • Time zone:	

Installation and Initial Configuration

The initial setup includes mounting the device on a flat surface or in a rack and completing the configuration tasks necessary to bring the device online and verify the operation.

Table 8: Installation and Basic System Configuration

Task	Task Details or Additional Information	Completed
Mount the device.	Choose one of the following mounting options: • Mount the device as a stand-alone unit. See Stand-alone Installation . • Mount the device in a four-post rack. See Installing the Universal Four-Post Rack Kit (XBR-R000296). • Mount the device in a two-post rack. See Installing the Universal Two-Post Rack Kit (XBR–R000294).	
Check the airflow of the power supply and fan assembly.	The airflow direction of the power supply and fan should match. The power supplies and fan trays are clearly labeled with either a green arrow with an "E", or an orange arrow with an "I." For more details, see Identifying the Airflow Direction.	
Gather all components required for the initial setup.	See Items Required.	
Provide power to the device.	See Providing Power to the Device.	
Attach a management station, establish a serial connection, and change the default passwords (optional).	After completing this task, log on to the serial port to configure the device.	
Set the IP address, subnet mask, and the default gateway IP address.	Use the `ipaddrset` command to configure a static device IP address, subnet mask, and gateway IP address, or you can use a DHCP server to obtain the information dynamically. See Configuring the IP Address.	
Set the date and time.	• Use the `date` command to display and set the date and time. • Use the `tstimezone` command to display and set the time zone. • Use the `tsclockserver` command to synchronize the time with an external NTP server. See Setting the Date and Time for more information.	
Customize the switch name and chassis name.	• Use the `switchname` command to change the default switch name. • Use the `chassisname` command to change the default chassis name. See Customizing the Chassis Name and Switch Name for more information.	
Establish an Ethernet connection.	By establishing an Ethernet connection, you can complete the device configuration using a serial session, Telnet, or management application, such as SANnav. See Establishing an Ethernet Connection.	

Task	Task Details or Additional Information	Completed
Optional: Configure the DNS service.	Use the `dnsconfig` command to create DNS server entries. Refer to the *Brocade Fabric OS Administration Guide*.	
Optional: Customize the domain ID.	Use the `configure` command to change the domain ID (default ID is 1). See Setting the Domain ID for more information.	
Verify that the device operates correctly.	• Check the LEDs to verify operation of functional parts. See Interpreting Port-side LEDs and Interpreting Nonport-Side LEDs. • The following commands can be useful to establish an operational baseline for the device. Refer to the *Brocade Fabric OS Command Reference Manual* for more information on the following commands: – `errdump` – `fanshow` – `historyshow` – `psshow` – `tempshow`	
Back up the configuration.	Use the interactive `configupload` command to back up the configuration. See Backing up the Configuration for more information.	
Optional: Power off the devices.	Enter the `shutdown` command and wait for the device to power down, and then unplug the power cords. See Powering Down the Device for more information.	

Shipping Carton Contents

When unpacking the device, verify that the contents of the shipping carton are complete. Save the shipping carton and packaging in the event you must return the shipment.

- The Brocade switch.
- An accessory kit containing the following items:
  - For G620 (Switch Type 183), a mini-USB cable. (For G620 (Switch Type 162), a serial cable.)
  - Two 1.82m (6 ft) power cords.
  - *Download Instructions for Fibre Channel Networking Software and Documents.*
- Inner foam

NOTE
Transceivers may be shipped in the accessory tray instead of installed in switch ports.

Mounting the Device

Mounting Options

You can install the device in several ways:

- As a stand-alone unit on a flat surface, for example, a table top. Use the rubber feet included with the shipment to secure the device on the surface. No other equipment is required for desktop installation.
- In a four-post EIA rack: You will need a Universal Four-Post Rack Kit (XBR-R000296) to install devices in EIA racks that are between L-13.7 cm to 81.28 cm deep (L-5.0 in. to 32.0 in.), where L is the chassis depth.
- In a two-post Telco rack: You will need a Universal Two-Post Rack Kit (XBR-R000294) to install 1U and 2U devices in a two-post telecommunications (Telco) rack.

NOTE
Review the following precautions before mounting the device.

Precautions Specific to Mounting

The following precautions apply to mounting the device.

DANGER
Use safe lifting practices when moving the product.

DANGER
Mount the devices you install in a rack as low as possible. Place the heaviest device at the bottom and progressively place lighter devices above.

CAUTION
Make sure the airflow around the front and back of the device is not restricted.

CAUTION
Never leave tools inside the chassis.

CAUTION
Do not use the port cover tabs to lift the module. They are not designed to support the weight of the module, which can fall and be damaged.

CAUTION
To prevent damage to the chassis and components, never attempt to lift the chassis using the fan or power supply handles. These handles were not designed to support the weight of the chassis.

Stand-alone Installation

Perform the following steps to install the device as a stand-alone unit on a table:

1. Unpack the device and verify that the items listed under Shipping Carton Contents are present and undamaged.
2. Apply the adhesive rubber feet to the underside of the device. The rubber feet help prevent the device from sliding off the supporting surface.
   a) Clean the indentations at each corner of the bottom of the device to ensure that they are free of dust or other debris that might lessen the adhesion of the feet.
   b) With the adhesive side against the chassis, place one rubber foot in each indentation and press into place.
3. Place the device on a sturdy flat surface.
4. Provide power to the device as described in Providing Power to the Device.

NOTE
Do not connect the device to the network until the IP address is set correctly. For instructions on how to set the IP address, see Configuring the IP Address.

Installing the Universal Four-Post Rack Kit (XBR-R000296)

Use the following instructions to install 1U and 2U devices in EIA racks that are from L-12.7 cm to 81.28 cm (L-5.0 in. to 32.0 in.) deep, where L is the chassis depth, using the Universal Four-Post Rack Kit (XBR-R000296).

You can mount the device in a four-post rack in two ways:

- With the port side flush with the front posts.
- With the nonport side flush with the rear posts in a recessed position. A recessed position allows a more gradual bend in the fiber-optic cables connected to the switch and less interference in the aisle at the front of the rack.

Table 9: Space Requirements

Chassis with Port-Side Side Vents	Notes	Chassis Depth	Minimum Rack Depth	Maximum Rack Depth
No	Applicable to port-side and nonport-side flush mounts.	L	L-12.7 cm (L-5 in.)	81.28 cm (32 in.)
Yes	Applicable to port-side flush mounts.	L	L-12.7 cm (L-5 in.)	81.28 cm (32 in.)
Yes	Applicable to nonport-side flush mounts.	L	L	81.28 cm (32 in.)

If the chassis depth (L) is less than 40.64 cm (16 in.), the chassis will not fit into a rack with a maximum depth of 81.28 cm (32 in.) using the Universal Four-Post Rack Kit. The maximum rack depth for a chassis less than 40.64 cm (16 in.) is 81.28 cm (32 in.) minus the difference between the chassis depth and 40.64 cm (16 in.). For example, a chassis with a depth (L) of 35.56 cm (14 in.) is 5.08 cm (2 in.) smaller than 40.64 cm (16 in.), so it will install into a rack with a maximum depth of 81.28 cm (32 in.) – 5.08 cm (2 in.), which equals 76.2 cm (30 in.).

Observe the following when mounting the device:

- Two people are required to install the device in a rack. One person holds the device, while the other screws in the front and rear brackets.
- Before mounting your device, review any specific installation and facility requirements in the hardware installation guide for the device.
- Hardware devices illustrated in these procedures are for reference only and may not depict the device that you are installing into the rack.

Time and Items Required

Allow 15 to 30 minutes to complete the installation.

The following items are required to install the device using the Universal Four-Post Rack Kit:

- No. 2 Phillips torque screwdriver
- 1/4-in. slotted-blade torque screwdriver

Parts List

The following parts are provided with the 1U, 1.5U, and 2U Universal Four-Post Rack Kit (XBR-R000296).

Figure 5: Universal Four-Post Rack Kit Parts

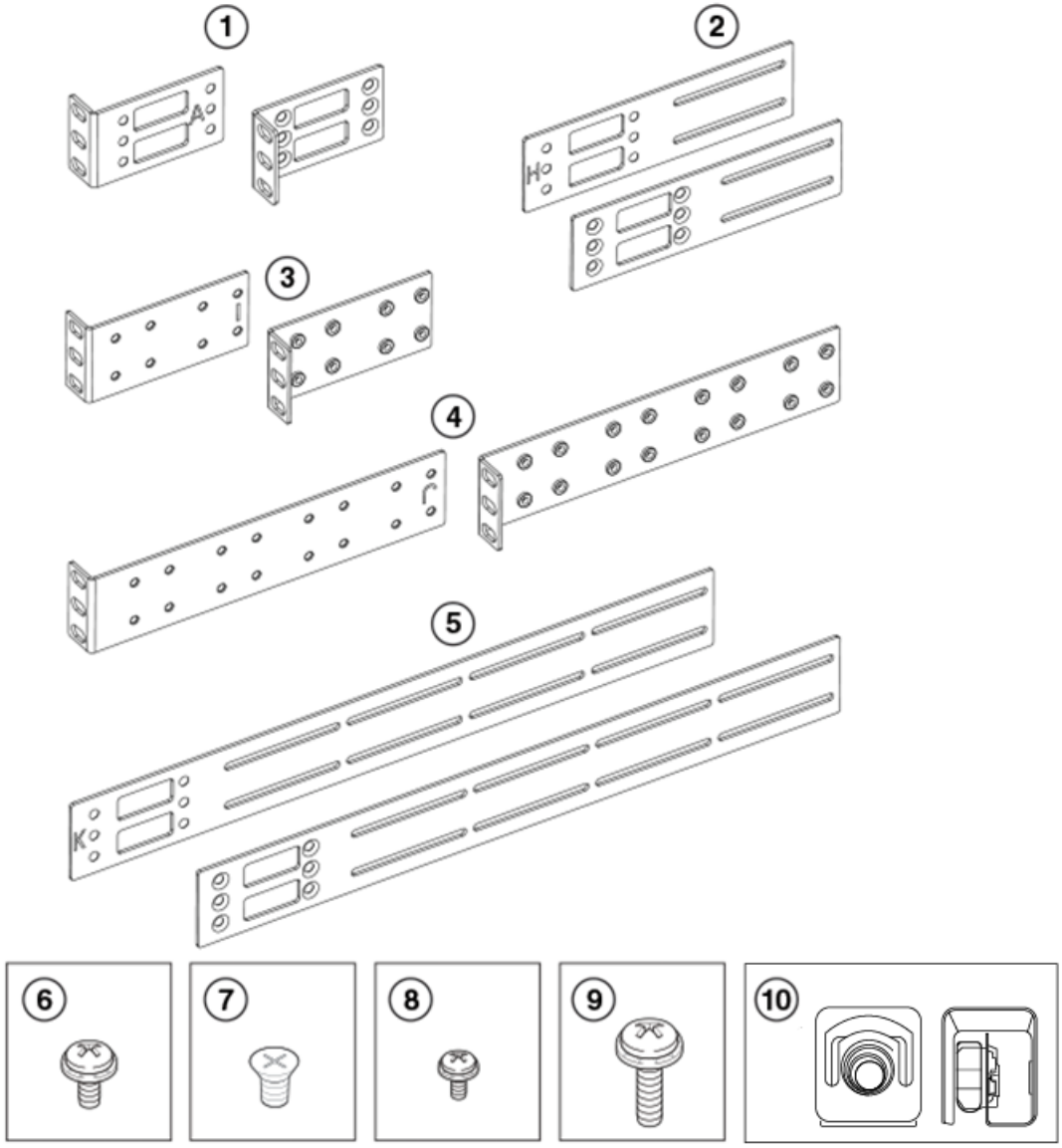

1. Front Brackets (2)
2. Extension Brackets, Medium (2)
3. Rear Brackets, Short (2)
4. Rear Brackets, Long (2)
5. Bracket Extensions, Long (2)
6. Screw, 8-32 x 5/16-in. Panhead Phillips (8)
7. Screw, 8-32 x 5/16-in. Flathead Phillips (16)
8. Screw, 6-32 x 1/4-in. Panhead Phillips (8)
9. Screw, 10-32 x 5/8-in. Panhead Phillips (8)

10. Retainer Nut, 10-32 (8)

Ensure that the items listed and illustrated are included in the kit. Note that not all parts may be used with certain installations depending on the device type.

CAUTION
Use the screws specified in the procedure. Using longer screws can damage the device.

Flush-Front Mounting

CAUTION
The device must be turned off and disconnected from the fabric during this procedure.

NOTE
The illustrations in the rack installation procedures are for reference only and may not show the device that you are installing.

Complete the following tasks to install the device in a four-post rack.

1. Attaching the Front Brackets
2. Attaching the Extension Brackets to the Device
3. Installing the Device in the Rack
4. Attaching the Rear Brackets to the Extensions
5. Attaching the Rear Brackets to the Rack Posts

Attaching the Front Brackets

Perform the following steps to attach the front brackets to the device:

1. Position the right front bracket with the flat side against the right side of the device at the front of the device.
2. Insert four 8-32 x 5/16-in. flathead screws through the vertically aligned holes in the bracket and then into the holes on the side of the device. Use the upper and lower screw holes, leaving the center holes empty.
3. Repeat Step 1 and Step 2 to attach the left front bracket to the left side of the device.
4. Tighten all 8-32 x 5/16-in. screws to a torque of 17 cm-kg (15 in.-lb).

Figure 6: Attaching the Front Brackets

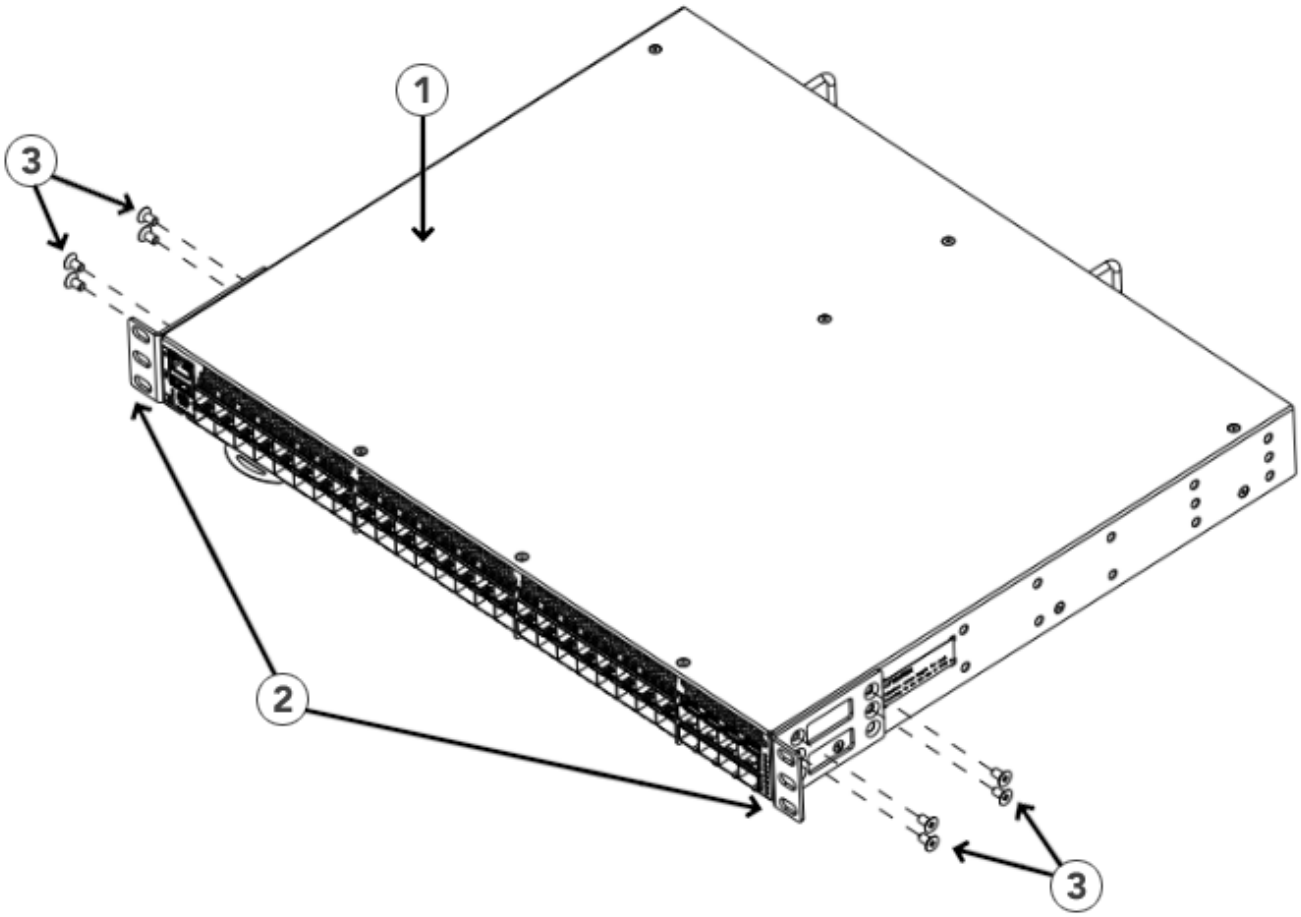

1. Brocade Device
2. Front Brackets
3. Screws, 8-32 x 5/16-in. Flathead Phillips

Attaching the Extension Brackets to the Device

Perform the following steps to attach the extension brackets to the device. You can use medium and long extension brackets for this task.

1. Select the proper length extension bracket for your rack depth.
2. Position the right extension bracket along the side of the device.
3. Insert four 8-32 x 5/16-in. flathead screws through the vertically aligned holes in the bracket extension and then into the holes on the side of the device. Use the upper and lower screw holes, leaving the center holes empty.
4. Repeat Steps 2 and 3 to attach the left extension bracket to the left side of the device.
5. Tighten all 8-32 x 5/16-in. screws to a torque of 17 cm-kg (15 in.-lb).

Figure 7: Attaching the Extension Brackets to the Device

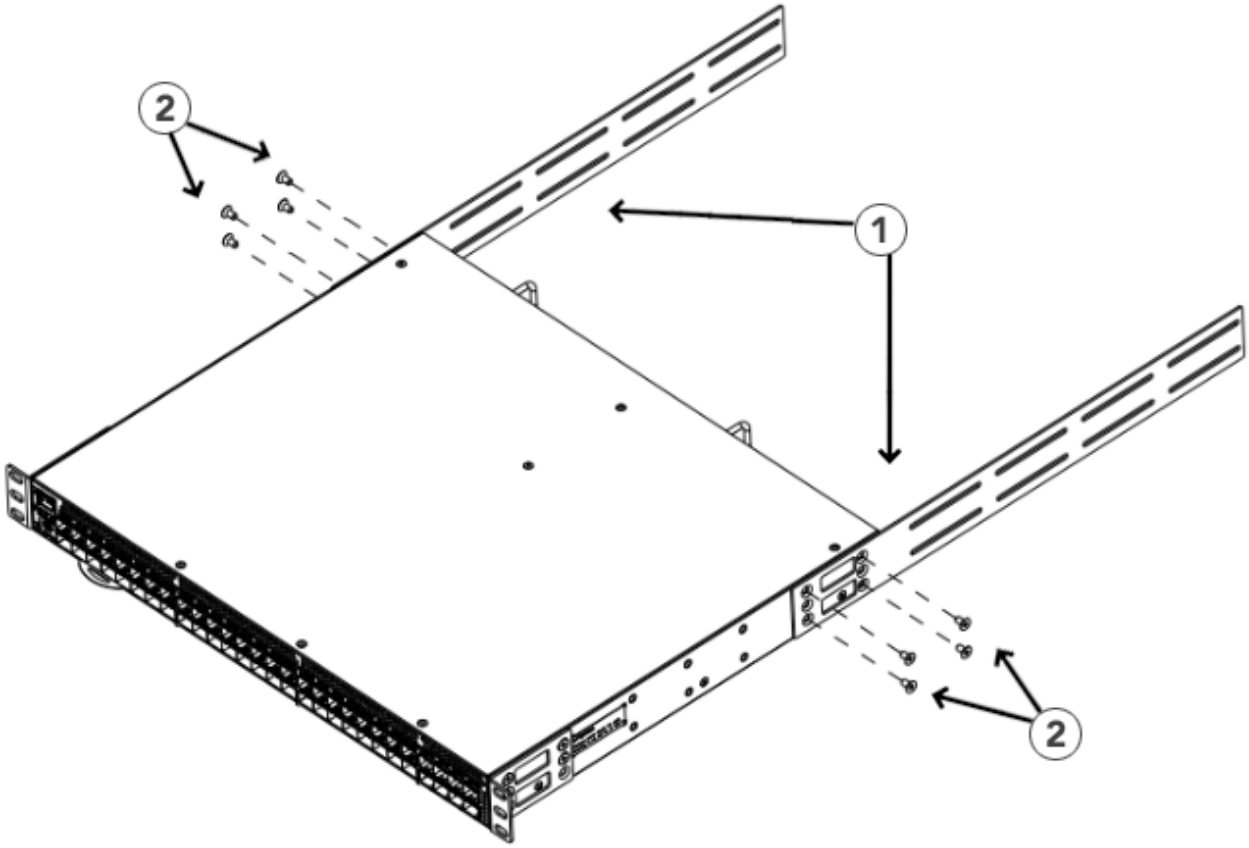

1. Extension Bracket
2. Screws, 8-32 x 5/16-in. Flathead Phillips

Installing the Device in the Rack

Perform the following steps to install the device in the rack:

1. Position the device in the rack. Provide temporary support under the device as you secure the rail kit to the rack.
2. Attach the right front bracket to the right front rack post using two 10-32 x 5/8-in. panhead screws and two retainer nuts. Use the upper and lower holes in the bracket.
3. Tighten all 10-32 x 5/8-in. screws to a torque of 29 cm-kg (25 in.-lb).

Figure 8: Positioning the Device in the Rack

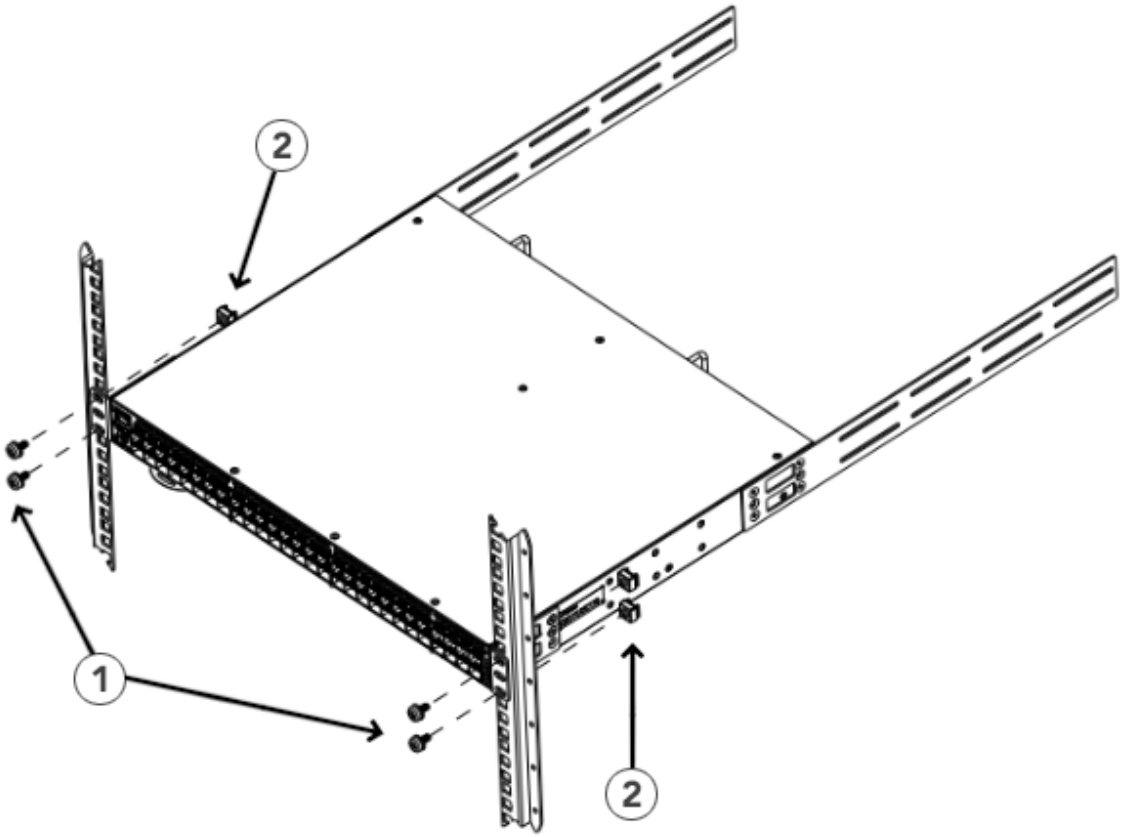

1. Screws, 10-32 x 5/8-in. Panhead Phillips
2. Retainer Nuts, 10-32

Attaching the Rear Brackets to the Extensions

Perform the following steps to attach the rear brackets to the extensions. You can use short or long rear brackets for this task, depending on the depth of your rack.

1. Select the proper length rear bracket for your rack depth.
2. Slide the right rear bracket onto the right extension bracket.
3. Attach the brackets using four 6-32 x 1/4-in. panhead screws.
   If possible, leave at least one empty vertical pair of holes between the screws for better support.
4. Repeat Step 2 and 3 to attach the left rear bracket to the left extension bracket.
5. Adjust the brackets to the rack depth and tighten all 6-32 x 1/4-in. screws to a torque of 10 cm-kg (9 in.-lb).

Figure 9: Attaching the Rear Brackets to the Extensions

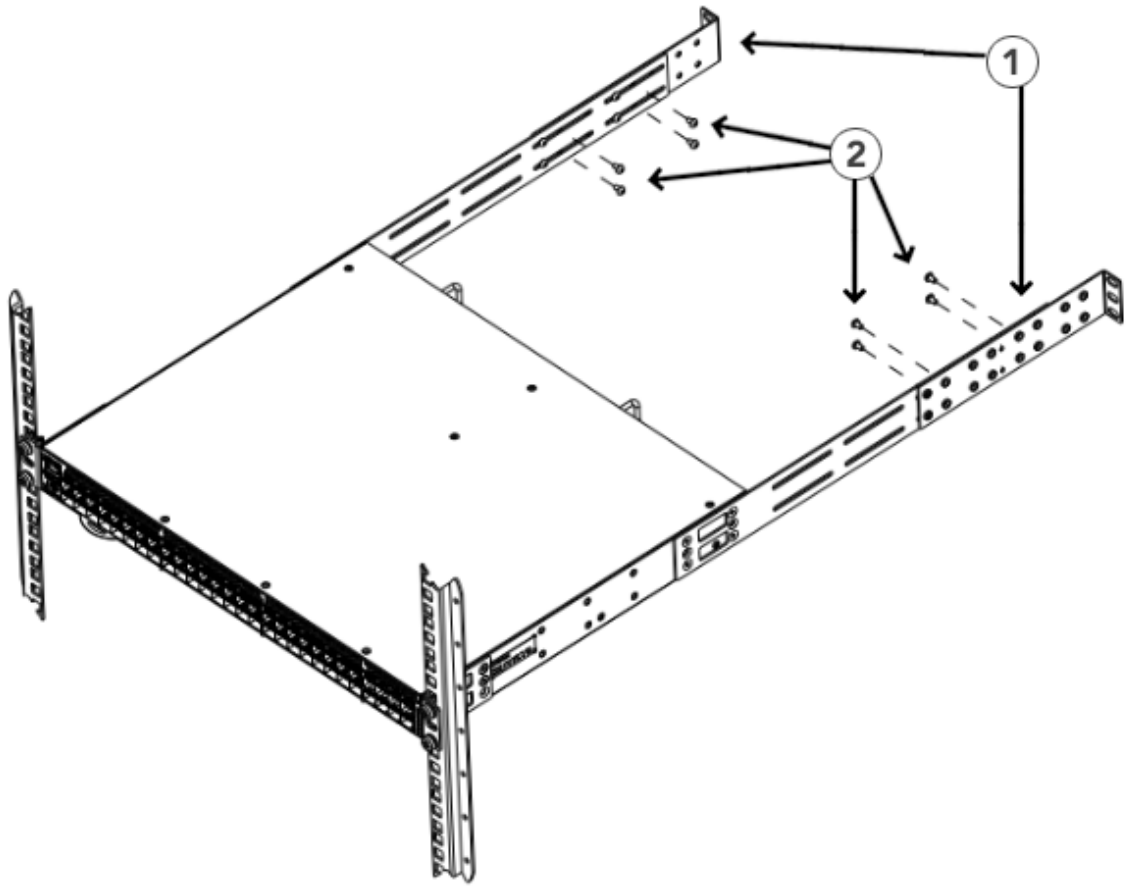

1. Rear Brackets
2. Screws, 6-32 x 1/4-in. Panhead Phillips

Attaching the Rear Brackets to the Rack Posts

Complete the following steps to attach the rear brackets to the rack posts.

1. Attach the right rear bracket to the right rear rack post using two 10-32 x 5/8-in. panhead screws and two retainer nuts. Use the upper and lower holes in the bracket.
2. Attach the left rear bracket to the left rear rack post using two 10-32 x 5/8-in. panhead screws and two retainer nuts. Use the upper and lower holes in the bracket.
3. Tighten all 10-32 x 5/8-in. screws to a torque of 29 cm-kg (25 in.-lb).

Figure 10: Attaching the Rear Brackets to the Rack Posts

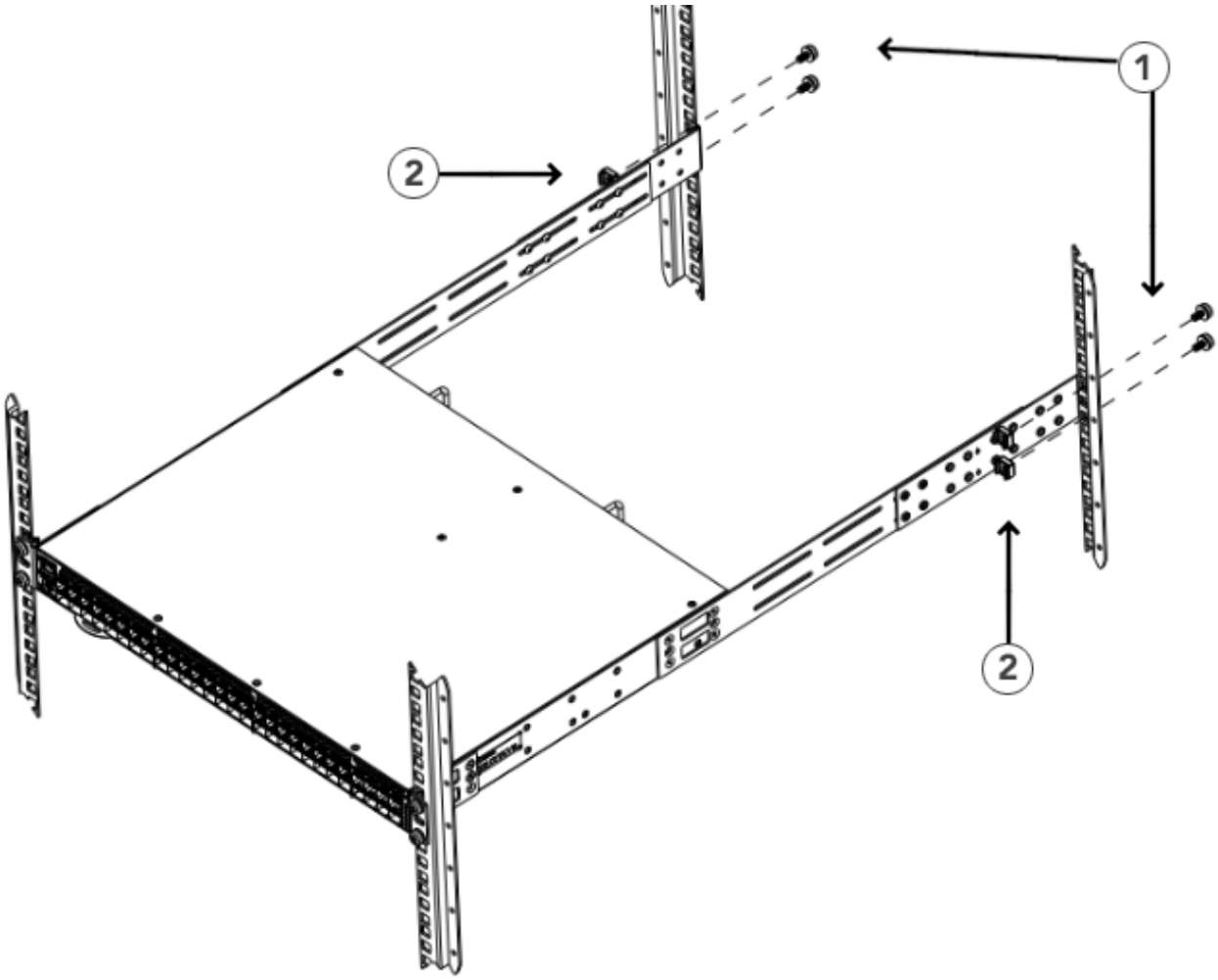

1. Screws, 10-32 x 5/8-in. Panhead Phillips
2. Retainer Nuts, 10-32

Flush-Rear (Recessed) Mounting

Flush-rear (recessed) mounting is similar to flush-front mounting except that the brackets are reversed on the device.

CAUTION
The device must be turned off and disconnected from the fabric during this procedure.

NOTE
The illustrations in the rack installation procedures show a 1U device, but the instructions are the same for a 2U device. The illustrations in the rack installation procedures are for reference only and may not show the actual device.

Complete the following tasks to install the device in a four-post rack:

1. Attaching the Front Brackets to the Rear of the Device
2. Attaching the Extensions to the Front of the Device
3. Installing the Device in the Rack
4. Attaching the Rear Brackets to the Extensions at the Front of the Device
5. Attaching the Rear Brackets to the Front Rack Posts

Attaching the Front Brackets to the Rear of the Device

NOTE
In this installation, the brackets are named as listed in the parts list even though the installation of the brackets is reversed from the flush-front installation.

Perform the following steps to attach the front brackets to the rear of the device:

1. Position the right front bracket with the flat side against the right rear side of the device.
2. Insert four 8-32 x 5/16-in. flathead screws through the vertically aligned holes in the bracket and then into the holes on the side of the device. Use the upper and lower screw holes, leaving the center holes empty.
3. Repeat Steps 1 and 2 to attach the left front bracket to the left side of the device.
4. Tighten all 8-32 x 5/16-in. screws to a torque of 17 cm-kg (15 in.-lb).

Figure 11: Attaching the Front Brackets to the Rear of the Device

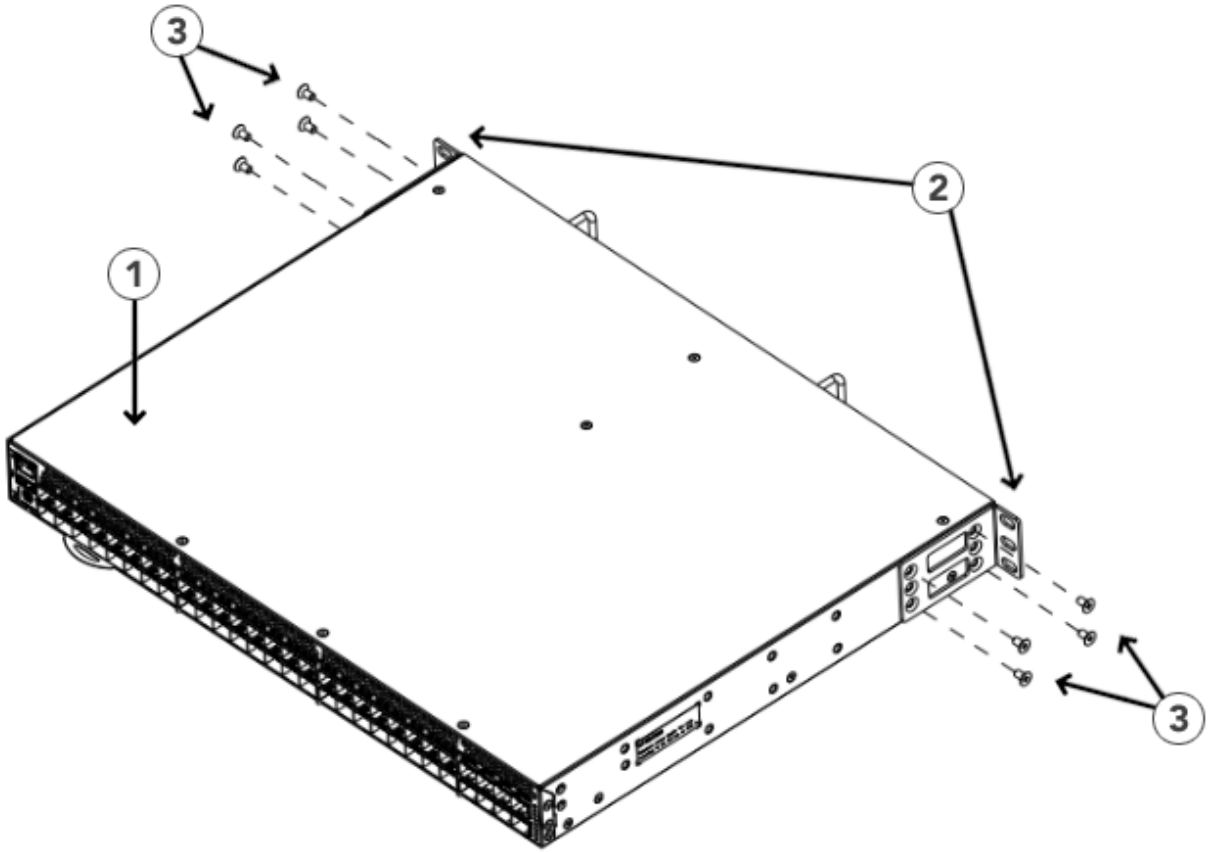

1. Brocade Device
2. Front Brackets
3. Screws, 8-32 x 5/16-in. Flathead Phillips

Attaching the Extensions to the Front of the Device

Complete the following steps to attach the extension brackets to the front of the device. You can use medium or long extension brackets for this task, depending on your rack depth.

1. Select the proper length extension bracket for your rack depth.
2. Position the right extension bracket along the side of the device.
3. Insert four 8-32 x 5/16-in. flathead screws through the vertically aligned holes in the extension brackets and then into the holes on the side of the device. Use the upper and lower screw holes, leaving the center holes empty.
4. Repeat Steps 2 and 3 to attach the left front extension bracket to the left side of the device.
5. Tighten all the 8-32 x 5/16-in. screws to a torque of 17 cm-kg (15 in.-lb).

Figure 12: Attaching the Extensions to the Device

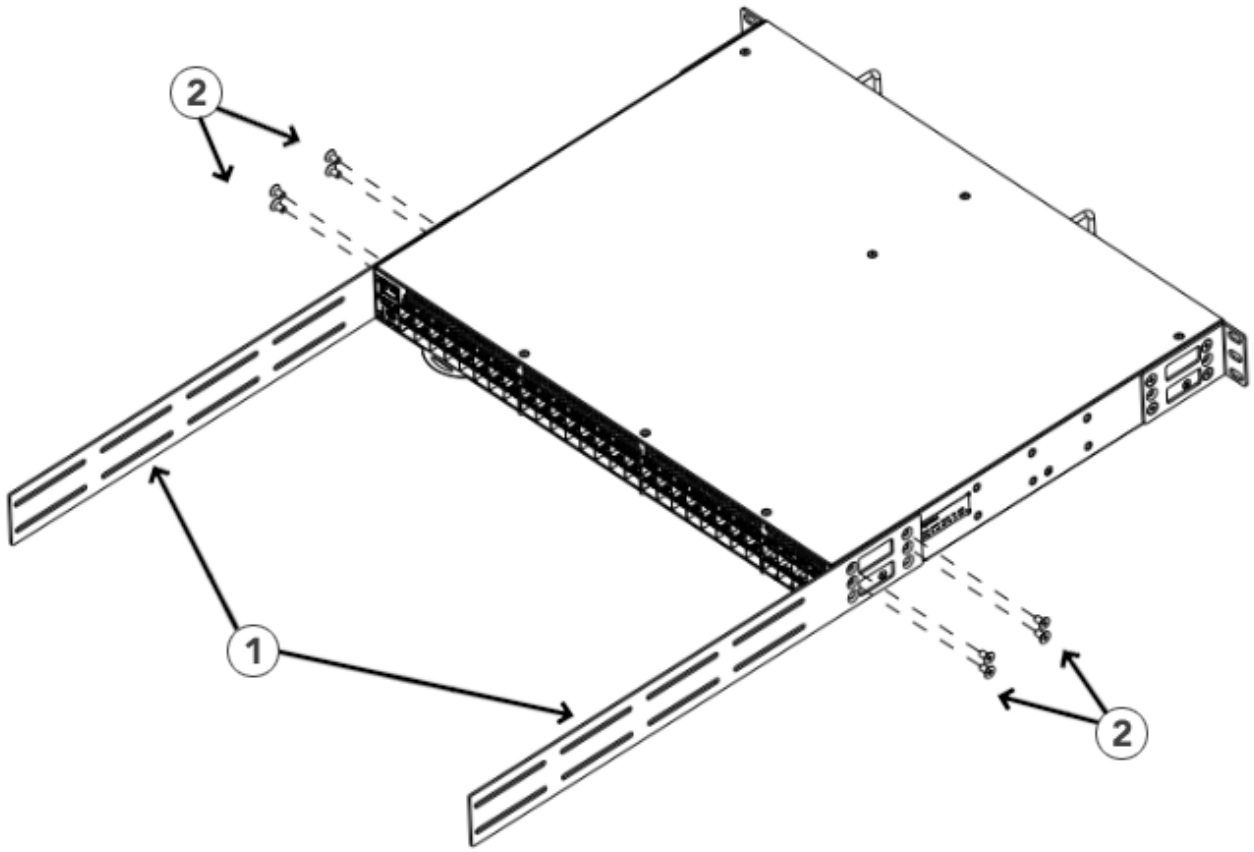

1. Extensions
2. Screws, 8-32 x 5/16-in. Flathead Phillips

Installing the Device in the Rack

Perform the following steps to install the device in the rack:

1. Position the device in the rack, providing temporary support under the device until the rail kit is secured to the rack.
2. Attach the right front bracket to the right rear rack post using two 10-32 x 5/8-in. panhead screws and two retainer nuts. Use the upper and lower holes in the bracket.
3. Tighten all 10-32 x 5/8-in. screws to a torque of 29 cm-kg (25 in.-lb).

Figure 13: Positioning the Device in the Rack

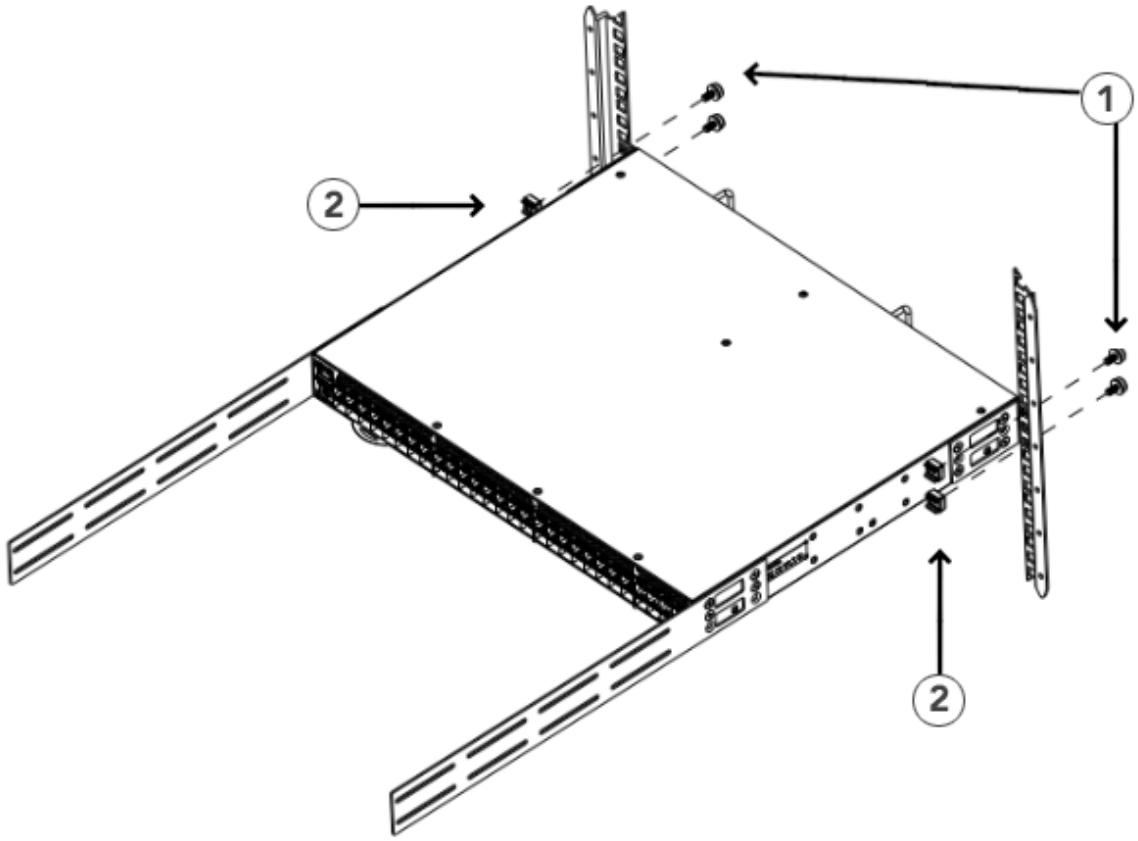

1. Screws, 10-32 x 5/8-in. Panhead Phillips
2. Retainer Nuts, 10-32

Attaching the Rear Brackets to the Extensions at the Front of the Device

Complete the following steps to attach the rear brackets to the extensions. Rack depth determines the use of short or long brackets.

1. Select the proper length rear bracket for your rack depth.
2. Slide the right rear bracket onto the right extension.

   Use the first and third vertical pairs of holes for the screws.

   See Figure 13 for the positioning of the short or long brackets and screws.
3. Attach the brackets using four 6-32 x 1/4-in. panhead screws.
4. Repeat Steps 2 and 3 to attach the left rear bracket to the left extension.
5. Adjust the brackets to the rack depth, and tighten all 6-32 x 1/4-in. screws to a torque of 10 cm-kg (9 in.-lb).

Figure 14: Attaching the Rear Brackets to the Extensions at the Front of the Device

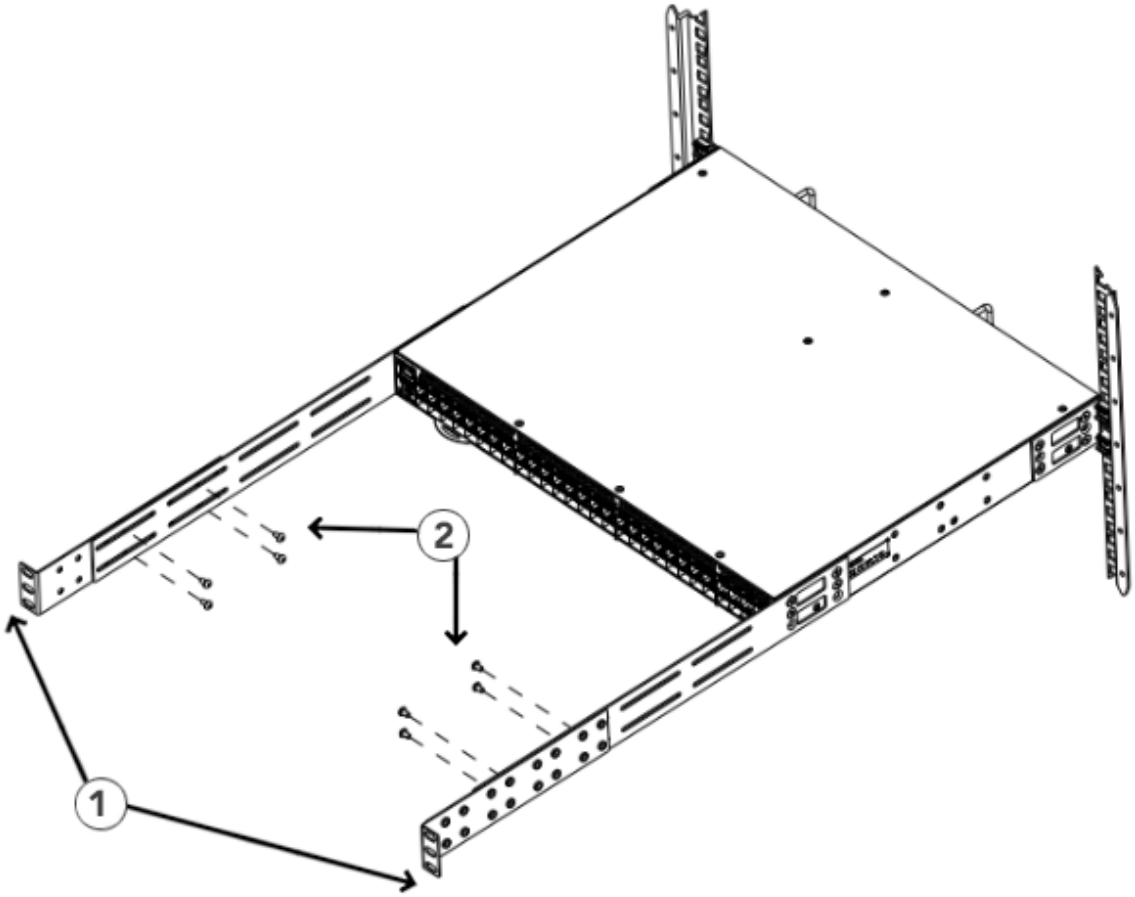

1. Rear Brackets, Short
2. Screws, 6-32 x 1/4-in. Panhead Phillips

Figure 15: Attaching the Short or Long Rear Brackets to the Extensions

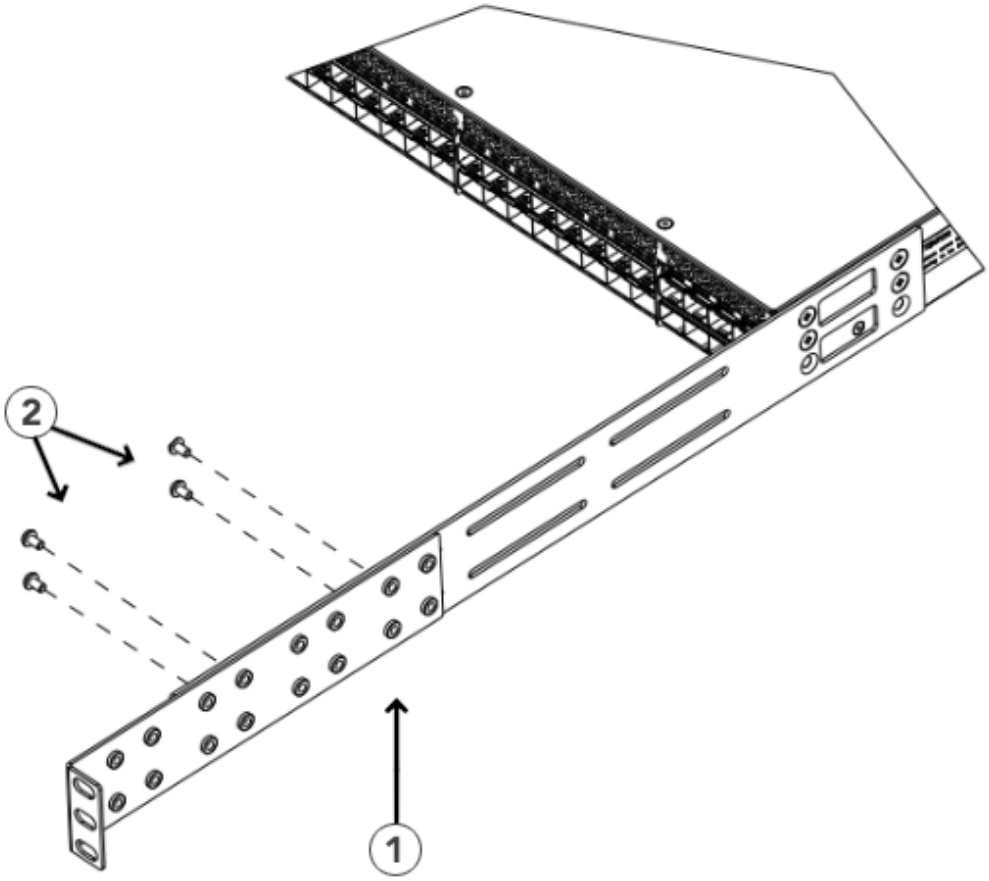

1. Rear Bracket, Short or Long
2. Screws, 6-32 x 1/4-in. Panhead Phillips

Attaching the Rear Brackets to the Front Rack Posts

Perform the following steps to attach the rear brackets to the front rack posts:

1. Attach the right rear bracket to the right front rack post using two 10-32 x 5/8-in. screws and two retainer nuts, as shown in Figure 14. Use the upper and lower holes in the bracket.
2. Attach the left rear bracket to the left front rack post using two 10-32 x 5/8-in. screws and two retainer nuts. Use the upper and lower holes in the bracket.
3. Tighten all 10-32 x 5/8-in. screws to a torque of 29 cm-kg (25 in.-lb).

Figure 16: Attaching the Rear Brackets to the Front Rack Posts

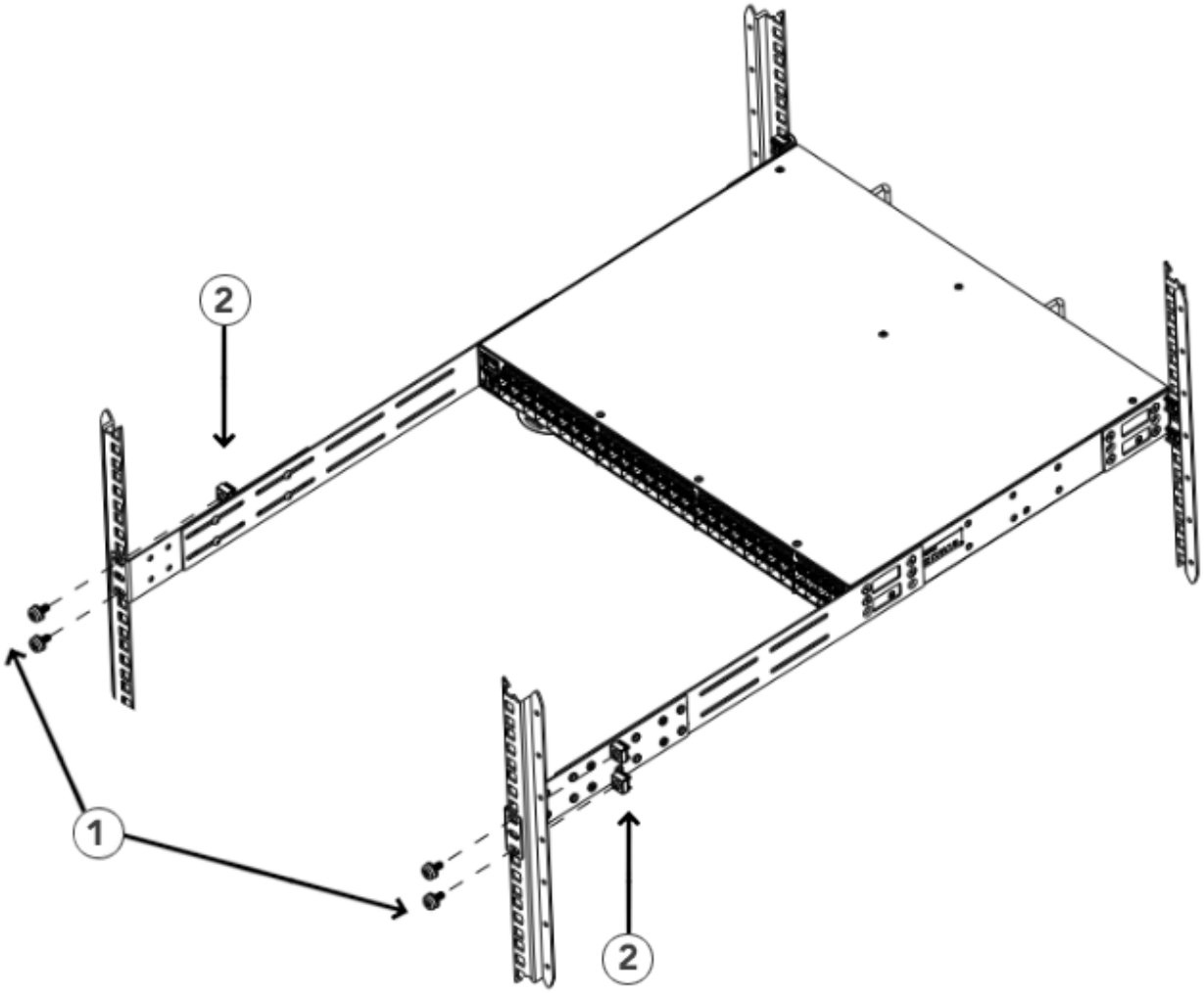

1. Screws, 10-32 x 5/8-in. Panhead Phillips
2. Retainer Nuts, 10-32

Installing the Universal Two-Post Rack Kit (XBR–R000294)

Use the following instructions to install a Brocade 1U or 2U device in a two-post telecommunications (Telco) rack using the Universal Two-Post Rack Kit (XBR-R000294).

You can mount the device in a two-post rack in two ways:

- With the port side flush with the front posts
- With the posts mounted to the mid-section of the device

Observe the following when mounting this device:

- Two people are required to install the device in a rack. One person should hold the device, while the other while the other screws in the front and rear brackets.
- Before mounting your device, review any specific installation and facility requirements in the hardware installation guide for the device.
- Hardware devices illustrated in these procedures are for reference only and may not depict the device that you are installing into the rack.

Time and Items Required

Allow 15 to 30 minutes to complete the installation.

The following items are required to install the device using the Universal Two-Post Rack Kit:

- No. 2 Phillips torque screwdriver
- 1/4-in. slotted-blade torque screwdriver

Parts List

The following parts are provided with the Universal Two-Post Rack Kit (XBR-R000294).

Figure 17: Universal Two-Post Rack Kit Parts

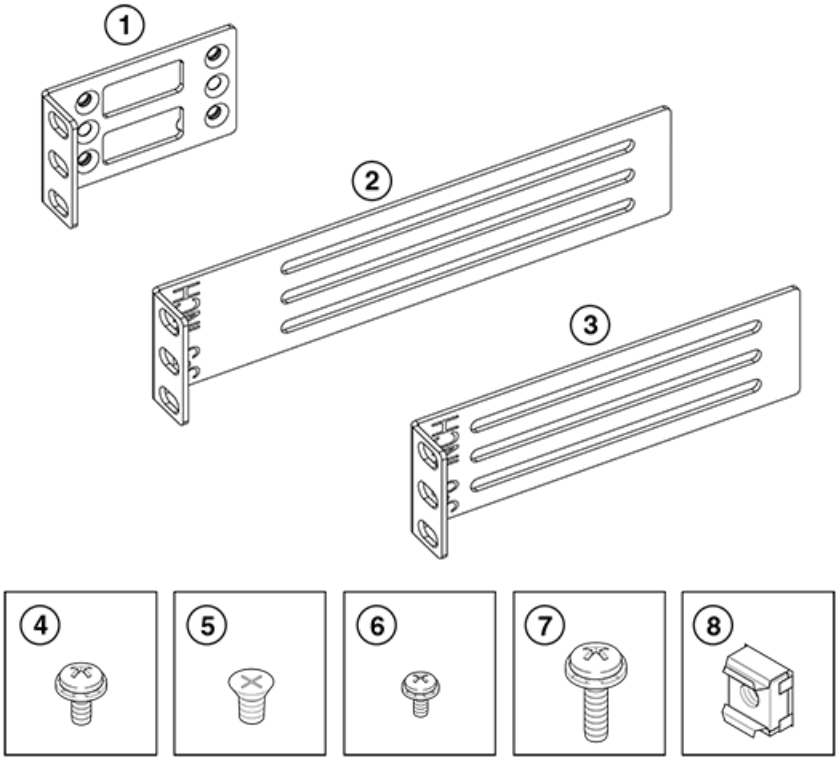

1. Front Brackets (2)
2. Rear Brackets, 5–6-in. Post (2)
3. Rear Brackets, 3–5-in. Post (2)

4. Screw, 8-32 x 5/16-in. Panhead Phillips (8)
5. Screw, 8-32 x 5/16-in. Flathead Phillips (16)
6. Screw, 6-32 x 1/4-in. Panhead Phillips (8)
7. Screw, 10-32 x 5/8-in. Panhead Phillips (8)
8. Retainer Nut, 10-32 (8)

Ensure that the items listed and illustrated in the preceding figure are included in the kit.

NOTE
Not all parts may be used with certain installations depending on the device type.

Flush-Front Mounting

Observe the following notes when performing this procedure:

- The device must be turned off and disconnected from the fabric during this procedure.
- The figures in this document show a 1U device, but the instructions are the same for a 2U device.
- The figures for this procedure show a two-post rack with narrow posts (3-in. to 5-in.) as an example.
- The figures in the rack installation procedures are for reference only and may not show the actual device.

CAUTION
Use the screws specified in the procedure. Using longer screws can damage the device.

Complete the following tasks to install the device in the rack:

1. Attaching the Front Brackets to the Device
2. Attaching the Front Brackets to the Rack
3. Attaching the Rear Brackets to the Rack
4. Attaching the Rear Brackets to the Device

Attaching the Front Brackets to the Device

Perform the following steps to attach the front brackets to the device.

1. Position the right front bracket with the flat side against the right side of the device.
2. Insert four 8-32 x 5/16-in. flathead screws through the vertically aligned holes in the bracket and then into the holes on the side of the device. Use the upper and lower screw holes, leaving the center holes empty.
3. Repeat Steps 1 and 2 to attach the left front bracket to the left side of the device.
4. Tighten all the 8-32 x 5/16-in. screws to a torque of 17 cm-kg (15 in.-lb).

Figure 18: Attaching the Front Brackets

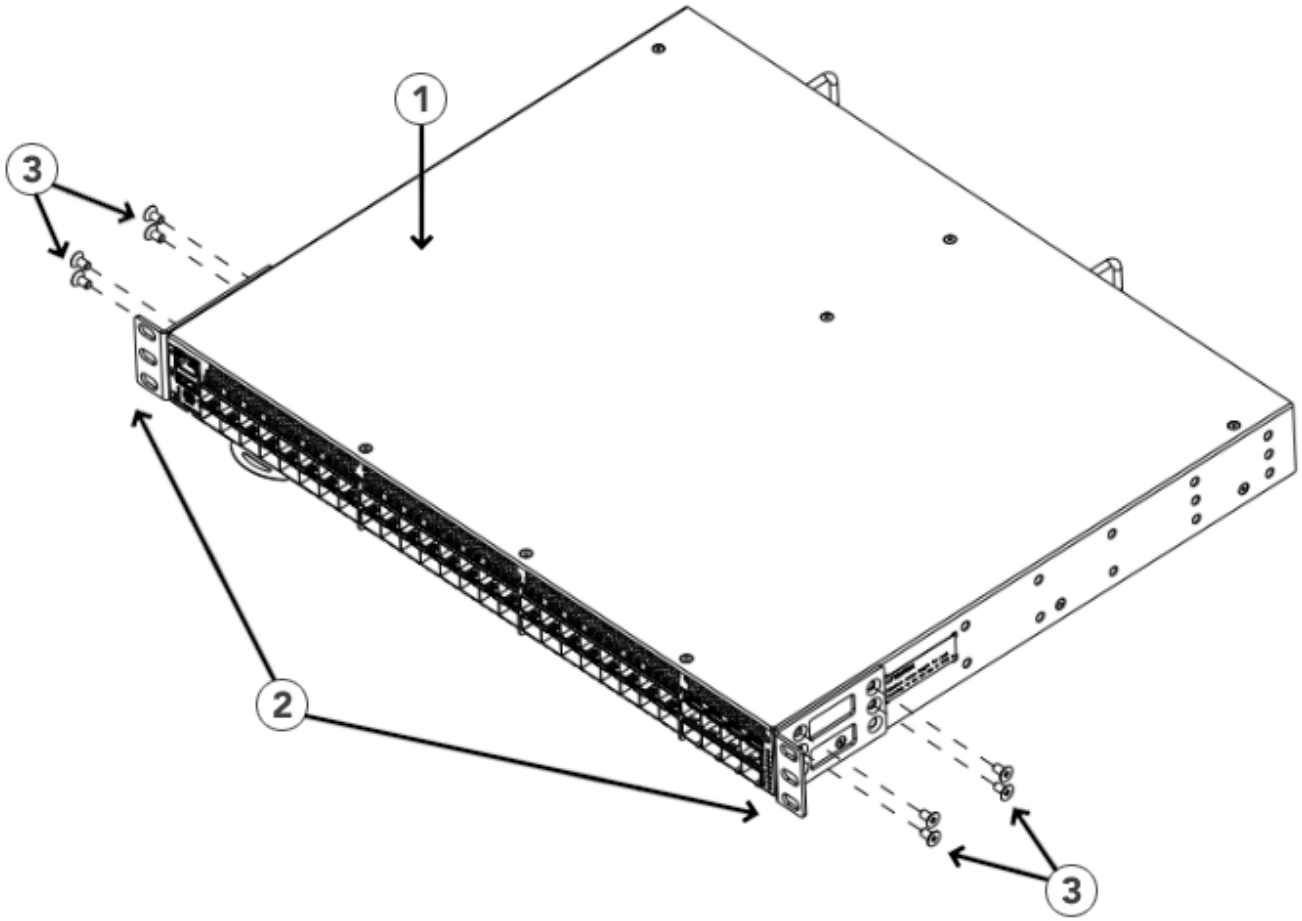

1. Brocade Device
2. Front Brackets, Right and Left
3. Screws, 8-32 x 5/16-in. Flathead Phillips

Attaching the Front Brackets to the Rack

Perform the following steps to install the device in the rack.

1. Position the device in the rack, providing temporary support under the device until the rack kit is fully secured to the rack.
2. Attach the right front bracket to the right rack upright using two 10-32 x 5/8-in. panhead screws and two retainer nuts. Use the upper and lower holes in the bracket.
3. Attach the left front bracket to the left rack upright using two 10-32 x 5/8-in. panhead screws and two retainer nuts. Use the upper and lower holes in the bracket.
4. Tighten all the 10-32 x 5/8-in. screws to a torque of 29 cm-kg (25 in.-lb).

Figure 19: Attaching the Front Brackets to the Rack

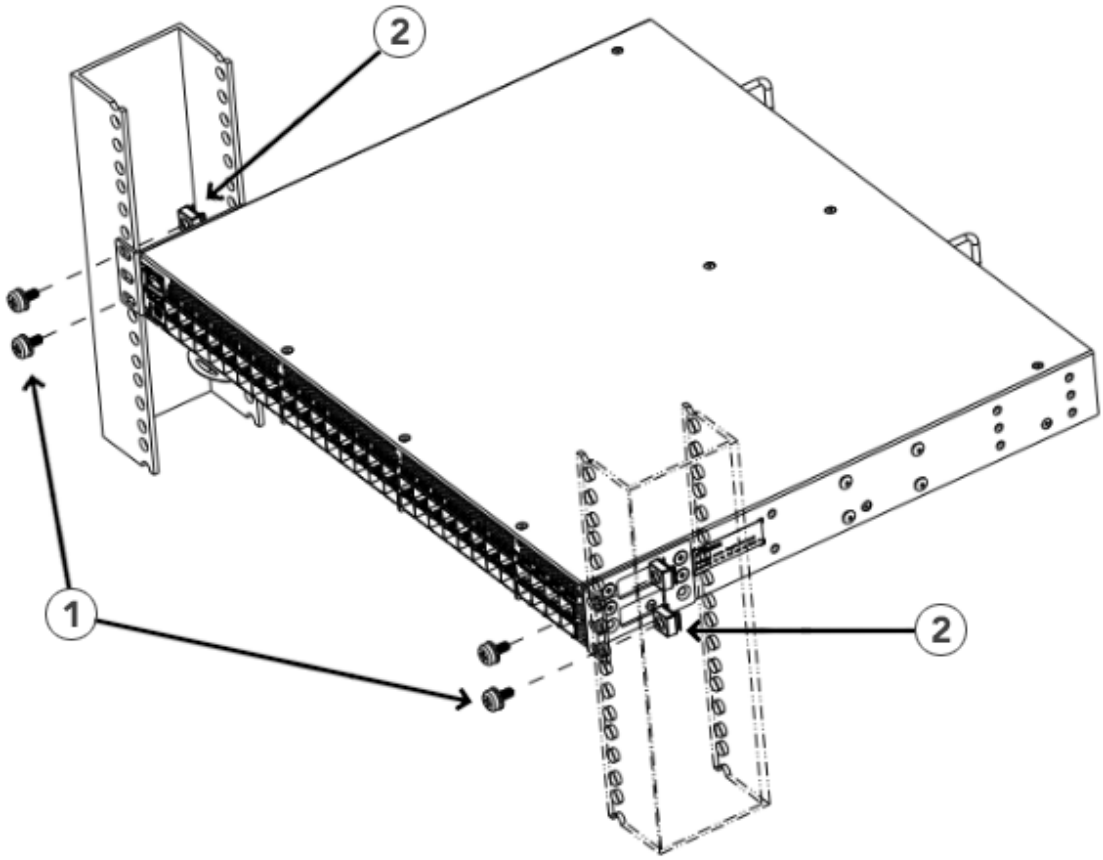

1. Screws, 10-32 x 5/8-in. Panhead Phillips
2. Retainer Nuts, 10-32

Attaching the Rear Brackets to the Rack

Perform the following steps to attach the rear brackets to the rack:

1. Select the proper length bracket for your post width. If your posts are 3 inches to 5 inches wide, use the brackets marked 3-5 INCH. If your posts are 5 to 6 inches wide, use the brackets marked 5-6 INCH.
2. Position the right rear bracket in the right rear of the device.
3. Attach the bracket to the right rack upright using two 10-32 x 5/8-in. panhead screws and two retainer nuts. Use the upper and lower holes in the bracket.
4. Repeat Steps 2 and 3 to attach the left rear bracket to the left rack upright.
5. Tighten all the 10-32 x 5/8-in. screws to a torque of 29 cm-kg (25 in.-lb).

Figure 20: Attaching the Rear Brackets to the Rack

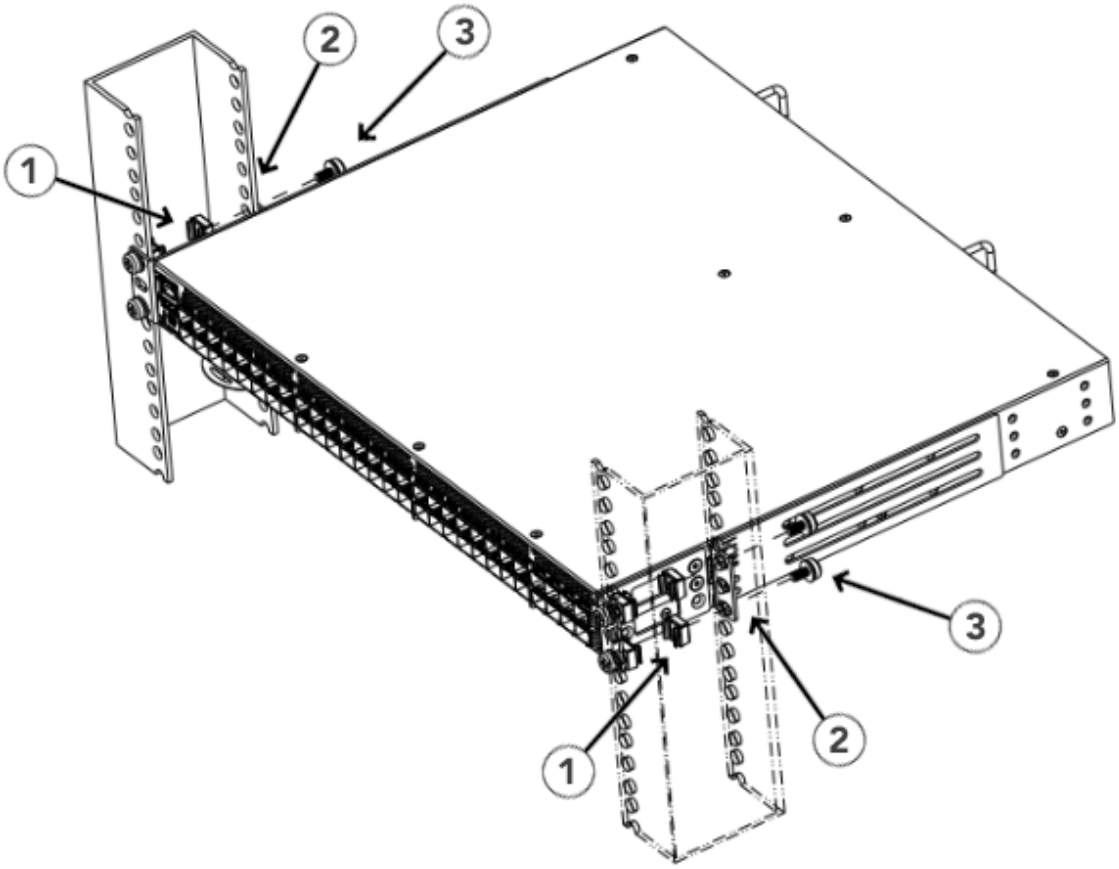

1. Retainer Nuts, 10-32
2. Rear Brackets
3. Screws, 10-32 x 5/8-in. Panhead Phillips

Attaching the Rear Brackets to the Device

Perform the following steps to attach the rear brackets to the device:

1. Align the right rear bracket to the right rear of the device and use four 8-32 x 5/16-in. panhead screws to attach the bracket to the device. Be sure to insert the screws through the upper and lower slots in the bracket.
2. Align the left rear bracket to the left rear of the device and use four 8-32 x 5/16-in. panhead screws to attach the bracket to the device. Again, use the upper and lower slots in the bracket.
3. Tighten all the 8-32 x 5/16-in. screws to a torque of 17 cm-kg (15 in.-lb).

Figure 21: Attaching the Rear Brackets to the Device

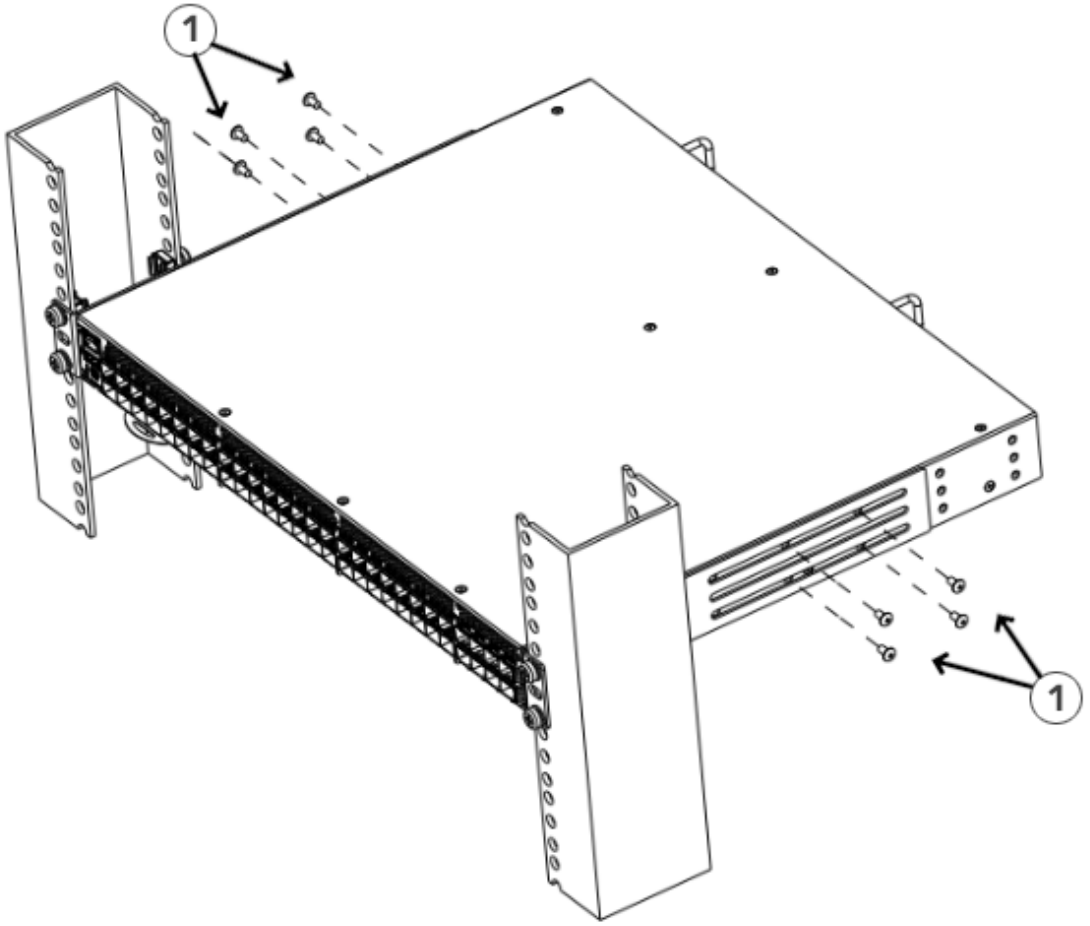

1. Screws, 8-32 x 5/16-in. Panhead Phillips

Mid-Mounting

Observe the following notes when performing this procedure:

- The device must be turned off and disconnected from the fabric during this procedure.
- The illustrations in this document show a 1U device, but the instructions are the same for a 2U device.
- The illustrations in the rack installation procedures are for reference only and may not show the actual device.

Complete the following tasks to install the device in the rack:

1. Attaching the Front Brackets to the Device
2. Attaching the Front Brackets to the Rack
3. Attaching the Rear Brackets to the Rack
4. Attaching the Rear Brackets to the Device

Attaching the Front Brackets to the Device

Perform the following steps to attach the front brackets to the device:

1. Position the right front bracket with the flat side against the right side of the device.
2. Insert four 8-32 x 5/16-in. flathead screws through the vertically aligned holes in the bracket and then into the holes on the side of the device. Use the upper and lower screw holes, leaving the center holes empty.
3. Repeat Steps 1 and 2 to attach the left front bracket to the left side of the device.
4. Tighten all 8-32 x 5/16-in. screws to a torque of 17 cm-kg (15 in.-lb).

Figure 22: Attaching the Front Brackets

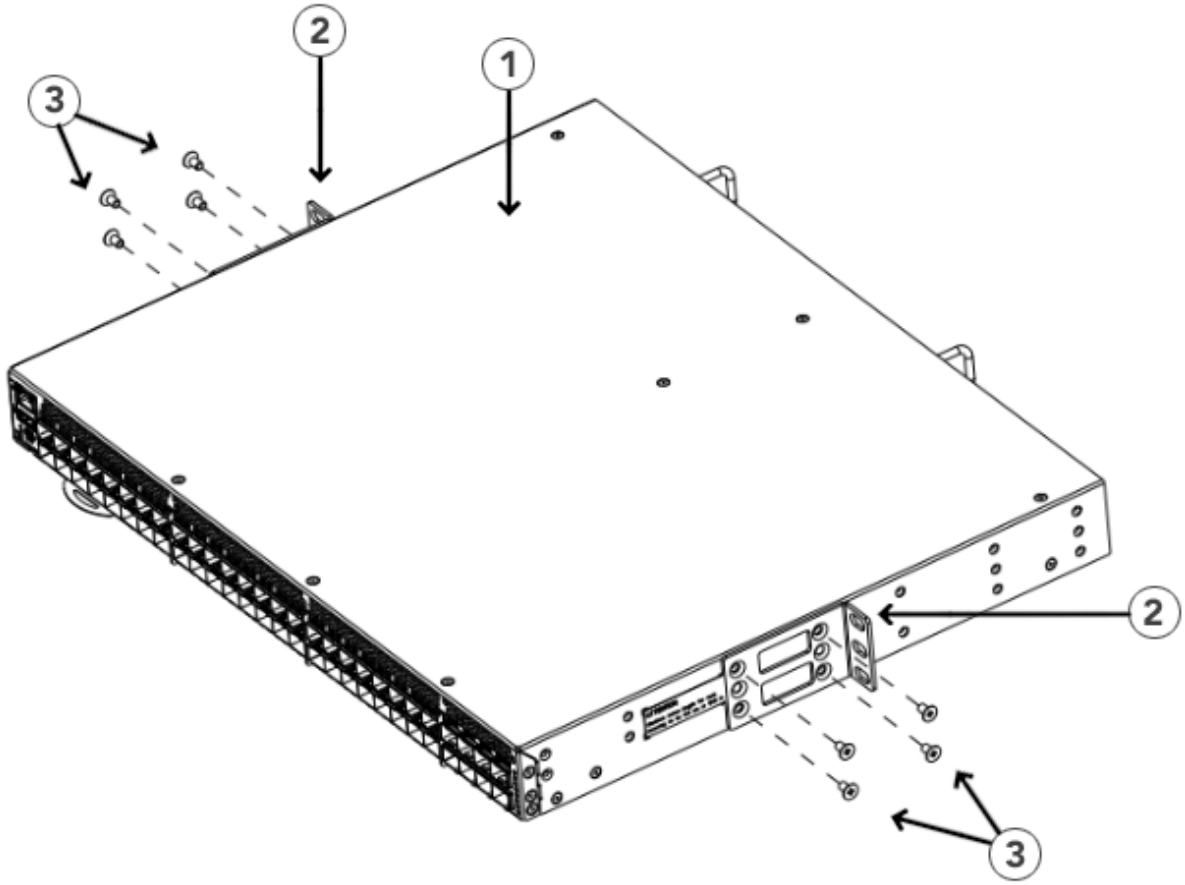

1. Brocade Device
2. Front Brackets, Right and Left
3. Screws, 8-32 x 5/16-in. Flathead Phillips

Attaching the Front Brackets to the Rack

Perform the following steps to install the front brackets to the rack:

1. Position the device in the rack, providing temporary support under the device until the rack kit is fully secured to the rack.
2. Attach the right front bracket to the right rack upright using two 10-32 x 5/8-in. screws and two retainer nuts. Use the upper and lower holes in the bracket.
3. Attach the left front bracket to the left rack upright using two 10-32 x 5/8-in. screws and two retainer nuts. Use the upper and lower holes in the bracket.
4. Tighten all 10-32 x 5/8-in. screws to a torque of 29 cm-kg (25 in.-lb).

Figure 23: Attaching the Front Brackets to the Rack

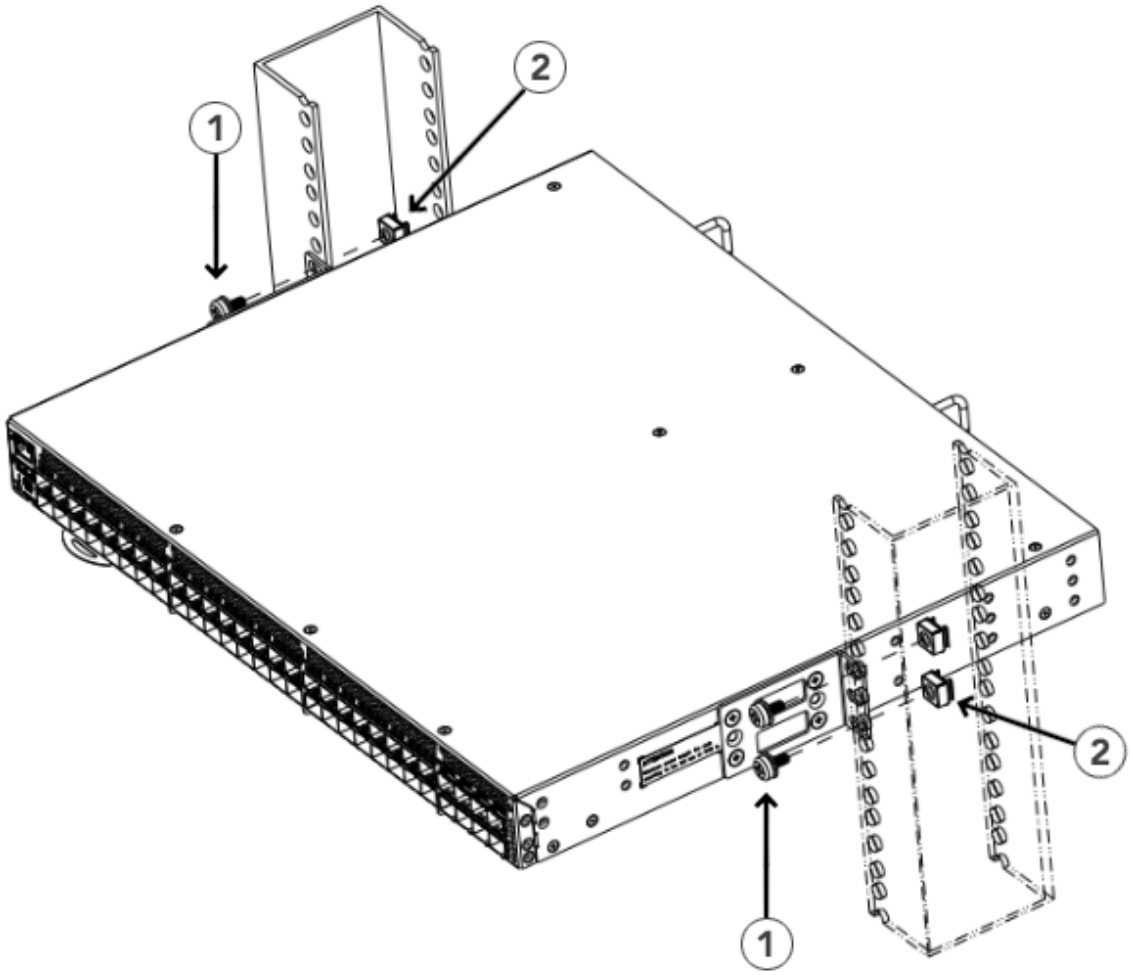

1. Screws, 10-32 x 5/8-in. Panhead Phillips
2. Retainer Nuts, 10-32

Attaching the Rear Brackets to the Rack

Perform the following steps to attach the rear brackets to the rack:

1. Select the proper length bracket for your post width. If your posts are 3 in. to 5 in. wide, use the brackets marked 3-5 INCH. If your posts are 5 in. to 6 in. wide, use the brackets marked 5-6 INCH.
2. Position the right rear bracket in the right rear of the device, as shown in the following figure. Whether you are using the 3-5 INCH or the 5-6 INCH bracket, the rear end of the bracket will be flush with the back of the device.
3. Attach the brackets to the right rack upright using two 10-32 x 5/8-in. panhead screws and two retainer nuts.
4. Repeat Step 2 and Step 3 to attach the left rear bracket to the left rack upright.
5. Tighten all 10-32 x 5/8-in. screws to a torque of 29 cm-kg (25 in.-lb).

Figure 24: Attaching the Rear Brackets to the Rack

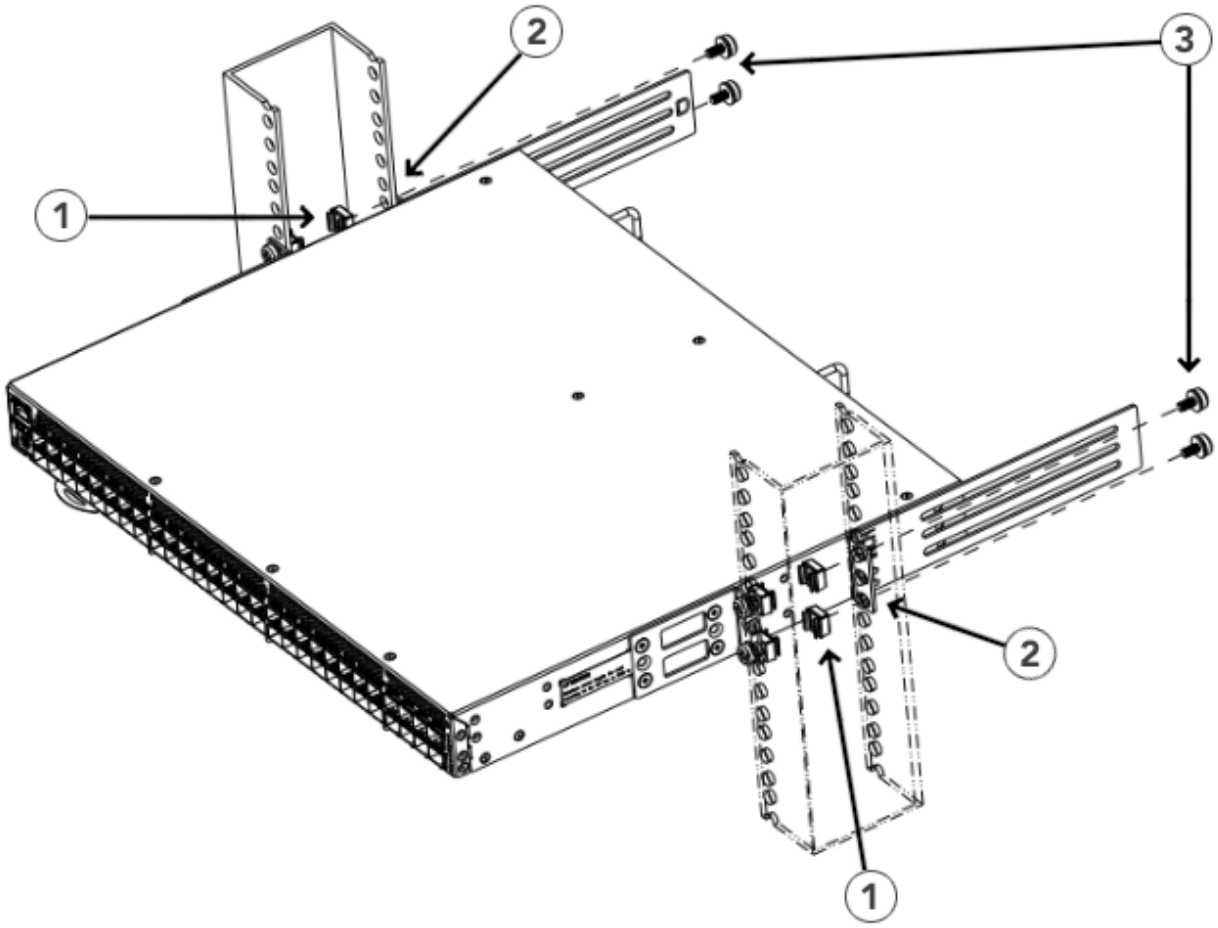

1. Retainer Nuts, 10-32
2. Rear Brackets (Right and Left)
3. Screws, 10-32 x 5/8-in. Panhead Phillips

Attaching the Rear Brackets to the Device

Perform the following steps to attach the rear brackets to the device:

1. Align the right rear bracket to the right rear of the device, and use four 8-32 x 5/16-in. panhead screws to attach the bracket to the device. Be sure to insert the screws through the upper and lower slots in the bracket.
2. Align the left rear bracket to the left rear of the device, and use four 8-32 x 5/16-in. panhead screws to attach the bracket to the device. Again, use the upper and lower slots in the bracket.
3. Tighten all 8-32 x 5/16-in. screws to a torque of 17 cm-kg (15 in.-lb).

Figure 25: Attaching the Rear Brackets to the Device

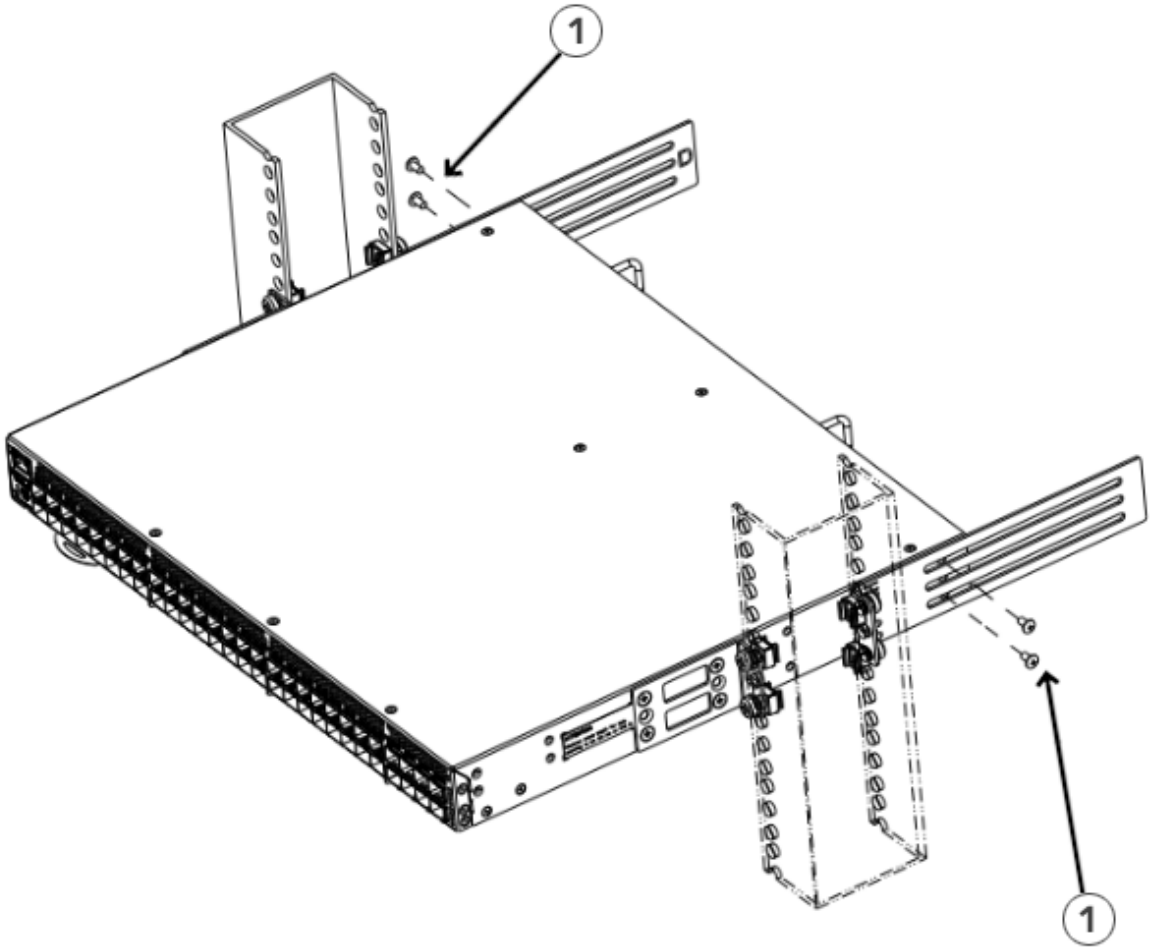

1. Screws, 8-32 x 5/16-in. Panhead Phillips

Initial Setup and Verification

Items Required

The following items are required for initial setup and verification of the device:

- The device mounted and connected to a power source, with the required power supply, fan assemblies, transceivers, and cables installed.
- A workstation computer with a terminal emulator application installed, such as PuTTY, XShell, or SecureCRT on Windows.
- An unused IP address with a corresponding subnet mask and gateway address.
- A serial cable with an RJ-45 connector.
- An Ethernet cable.
- Access to an FTP server or USB device for uploading (backing up) or downloading the device configuration (optional). The following list includes devices that Brocade has verified.

  NOTE
  Brocade recommends the use of a USB drive that has been test validated (verified) by Broadcom (Brocade):

  - SanDisk 32 CZ48 USB 3.0 Flash Drive (SDCZ48-032G-UAM46)
  - SanDisk 16 CZ48 USB 3.0 Flash Drive (SDCZ48-016G-UAM46)
  - Kingston 32GB DataTraveler 100 G3 USB 3.0 Flash Drive (DT100G3/32GB)
  - Kingston 32GB DataTraveler G4 USB 3.0 Flash Drive (DTIG4/32GB)
  - PNY Attache 3.0 4 USB 32GB Flash Drive
  - PNY Attache 3.0 4 USB 16GB Flash Drive

  These drives are not orderable from Broadcom but are generically branded and can be purchased from other suppliers.

Providing Power to the Device

Perform the following steps to provide power to the device:

1. Connect the power cords to both power supplies, and then to power sources on separate circuits to protect against power failure. Ensure that the power cords have a minimum service loop of 6 in. available and that they are routed to avoid stress.
2. Power on the power supplies by flipping both switches to the on position (the "I" symbol). The power supply LEDs display amber until the power-on self-test (POST) is complete, and then the LEDs change to green. The switch usually requires several minutes to boot and complete the POST.

   NOTE
   Power is supplied to the device as soon as the first power supply is connected and turned on.
3. After the POST is complete, verify that the switch power and switch status LEDs are green.

   For more information about how to interpret the POST, boot, and diagnostics tests, see Monitoring the Device.

Establishing a First-Time Serial Connection

Perform the following steps to log on to the device through a serial connection:

1. Connect the device with the workstation.
   - For G620 (Switch Type 162) connect the serial cable to the serial port on the device and to an RS-232 serial port on the workstation.
   - For G620 (Switch Type 183) connect the mini USB of the console cable to the device and the RJ-45 of the cable to the RJ-232 serial port on the workstation.

   If the serial port on the workstation is RJ-45 instead of RS-232, remove the adapter on the end of the serial cable and insert the exposed RJ-45 connector into the RJ-45 serial port on the workstation.
2. Disable any serial communication programs running on the workstation, such as synchronization programs.
3. Open a terminal emulator application, such as PuTTY, XShell, or SecureCRT on a Windows PC, or TERM, TIP, or C-Kermit in a Linux environment, and configure the application as follows:
   - In a Windows environment, use the following values.

Parameter	Value
Bits per second	9600
Data bits	8
Parity	None
Stop bits	1
Flow control	None (must be disabled on the host side)

NOTE
Flow control is not supported on the serial connection when attached to a remote terminal and must be disabled on the customer-side remote terminal server in addition to the host-side clients.

   - In a UNIX environment using TIP, enter the following string at the prompt:

     ```
     tip /dev/ttyb -9600
     ```

     If ttyb is already in use, use ttya instead and enter the following string at the prompt.

     ```
     tip /dev/ttya -9600
     ```
4. When the terminal emulator application stops reporting information, press `Enter` to display the login prompt.

   ```
   Switch Console Login:
   ```
5. Log on to the device as admin, using the default password (`password`). You are prompted to change the default user name and password at initial logon. Make sure to write down the new credentials and keep this information in a secure location.

   ```
   Fabric OS (swDir)
   swDir login: admin
   Password:
   Please change your passwords now.
   Use Control-C to exit or press 'Enter' key to proceed.
   swDir:admin>
   ```

6. Modify the credentials. To cancel, press `Ctrl+C` .

NOTE
Initial passwords can be 8 to 40 characters long. They must begin with an alphabetic character. They can include numeric characters, the period (.), and the underscore (_) only. Passwords are case-sensitive, and they are not displayed when you enter them on the command line.

Configuring the IP Address

You can configure the device with a static IP address, or you can use a Dynamic Host Configuration Protocol (DHCP) server to set the IP address of the switch. DHCP is enabled by default. The device supports both IPv4 and IPv6 addresses.

Using DHCP to Set the IP Address

When using DHCP, the switch obtains its IP address, subnet mask, and default gateway address from the DHCP server. The DHCP client can connect only to a DHCP server that is on the same subnet as the switch. If your DHCP server is not on the same subnet as the switch, use a static IP address.

Setting a Static IP Address

To set a static IP address for the device, perform the following steps:

1. Log on to the device as admin.
2. Use the `ipaddrset` command to set the Ethernet IP address.
   - If you will use an IPv4 address, enter the IP address in dotted decimal notation as prompted.

     ```
     Ethernet IP Address: [192.168.74.102]
     ```

   - If you will use an IPv6 address, enter the network information in colon-separated notation as prompted.

     ```
     device:admin> ipaddrset -ipv6 --add 1080::8:800:200C:417A/64
     IP address is being changed...Done.
     ```

3. Complete the rest of the network information as prompted (IPv4 format shown).

   ```
   Ethernet Subnetmask: [255.255.255.0]
   Ethernet IP Address: [192.168.74.102]
   Gateway IP Address: [192.168.74.1]
   ```

4. Enter `off` to disable DHCP when prompted.

   ```
   DHCP [OFF]: off
   ```

Setting the Date and Time

The date and time settings are used for event logging, error detection, and troubleshooting. However, device operation does not depend on the date and time; a device with incorrect date or time values still functions properly.

You can synchronize the local time of the principal or primary fabric configuration server (FCS) device to that of an external Network Time Protocol (NTP) server.

Perform the following steps to set the date and time:

1. Log on to the device as admin.
2. Enter the `date` ["*new-date*"] command at the command line.

   The "*new-date*" variable specifies the new date and time and is enclosed in double quotation marks. This variable is optional; if omitted, the current date and time are displayed. The date and time are specified as a string in *mmddhhmmyy* format:

   - *mm*: Specifies the month. Valid values are 01 to 12.
   - *dd*: Specifies the date. Valid values are 01 to 31.
   - *hh*: Specifies the hour. Valid values are 00 to 23.
   - *mm*: Specifies the minutes. Valid values are 00 to 59.
   - *yy*: Specifies the year. Valid values are 00 to 37 and 70 to 99. Year values from 70 to 99 are interpreted as 1970 to 1999; year values from 00 to 37 are interpreted as 2000 to 2037.

```
device:admin> date
Thu Dec 22 14:05:10 UTC 2016
device:admin> date "1222150617"
Thu Dec 22 15:06:00 UTC 2017
```

Setting the Time Zone

The default time zone is Coordinated Universal Time (UTC). The time zone must be set only once because the value is stored in nonvolatile memory. Use the following procedure to set the time zone.

1. Log on as admin.
2. Use the `tsTimeZone --interactive` command and follow the prompts, or enter the `tsTimeZone` **-[***hour-offset*,*minute-offset*] command as follows:

   For Pacific Standard Time, enter `tsTimeZone -8,0`.

   For Central Standard Time, enter `tsTimeZone -6,0`.

   For Eastern Standard Time, enter `tsTimeZone -5,0`.

Table 10: tsTimeZone Command Parameter Selection for the U.S. Time Zones

Local Time	tsTimeZone Parameter (Difference from UTC)
Atlantic Standard	-4,0
Atlantic Daylight	-3,0
Eastern Standard	-5,0
Eastern Daylight	-4,0
Central Standard	-6,0
Central Daylight	-5,0
Mountain Standard	-7,0
Mountain Daylight	-6,0
Pacific Standard	-8,0
Pacific Daylight	-7,0
Alaskan Standard	-9,0
Alaskan Daylight	-8,0

Local Time	tsTimeZone Parameter (Difference from UTC)
Hawaiian Standard	-10,0

Synchronizing the Local Time with an External Source

Perform the following steps to synchronize the local time of the principal or primary FCS device with that of an external NTP server:

1. Log on as admin.
2. Enter the `tsClockServer` [*ipaddr*] command.

   The *ipaddr* variable represents the IP address of the NTP server that the device can access. This variable is optional; by default, the value is `LOCL` .

```
switch:admin> tsclockserver 192.168.126.60
Updating Clock Server configuration...done.
Updated with the NTP servers
```

Customizing the Chassis Name and Switch Name

Changing the chassis and switch names is important for uniquely distinguishing and identifying the device and for accurate tracking of logs and errors. The messages that appear in the log are labeled with the switch name or chassis name, which makes tracking the errors much easier. Specify an easily understandable and meaningful name for the chassis and switch.

Perform the following steps to change the chassis name and then the switch name:

1. Log on to the device using the admin account.
2. Change the chassis name by using the `chassisName` command.

```
device:admin> chassisname Chassis_001
```

3. Change the switch name by using the `switchName` command.

```
device:admin> switchname Switch_001
Committing configuration...
Done
Switch name has been changed. Please re-login to the switch for the change to applied
```

Establishing an Ethernet Connection

Perform the following steps to establish an Ethernet connection to the device:

1. Remove the plug from the Ethernet port.
2. Connect an Ethernet cable to the device Ethernet port and to the workstation or to an Ethernet network that connects the workstation.

   NOTE
   At this point, the device can be accessed remotely, using either the command line or Brocade Web Tools. Ensure that the device is not being modified from any other connections during the remaining tasks in this chapter. The Ethernet management port also supports Auto MDI/MDIX.

Setting the Domain ID

Perform the following steps to set the switch domain ID:

1. Log on to the switch using the admin account.
2. Modify the domain ID if required.

   The default domain ID is 1. If the switch is not powered on until after it is connected to the fabric and the default domain ID is already in use, the domain ID for the new switch is automatically reset to a unique value. If the switch is connected to the fabric after it has been powered on and the default domain ID is already in use, the fabric segments. To find the domain IDs that are currently in use, enter the `fabricShow` command on another switch in the fabric.

   Perform the following steps to modify the domain ID:

   a) Disable the switch by entering the `switchDisable` command.
   b) Enter the `configure` command. The command prompts display sequentially; enter a new value or press `Enter` to accept each default value.
   c) Enter `y` after the `Fabric param` prompt.

      ```
      Fabric param (yes, y, no, n): [no] y
      ```

   d) Enter a unique domain ID (such as the domain ID used by the previous switch, if still available).

      ```
      Domain: (1..239) [1] 3
      ```

   e) Complete the remaining prompts or press `Ctrl+D` to accept the remaining settings without completing all the prompts.
   f) Re-enable the switch by entering the `switchEnable` command.

Verifying Correct Operation

Perform the following steps to verify the correct operation of the device:

1. Check the LEDs to verify that all components are functional.
2. Verify the correct operation of the device by entering the following commands from the workstation.

Command	Description
`errDump`	Displays any errors
`fanShow`	Displays fans status and information
`historyShow`	Displays the device history
`psShow`	Displays power supply status and information
`switchShow`	Displays switch status and information
`tempShow`	Displays temperature status and information

The `switchShow` command provides the following information about the device and port status.

```
EG620_192:admin> switchshow
switchName:     EG620_192
switchType:     183.0
switchState:    Online
switchMode:     Native
switchRole:     Subordinate
```

```
switchDomain:   192
switchId:       fffcc0
switchWwn:      10:00:d9:1f:cd:05:56:e1
zoning:         ON (fos6k)
switchBeacon:   OFF
FC Router:      OFF
Fabric Name:    FID1
HIF Mode:       OFF
LS Attribute:   [Inherited FID: 1]
Index Port Address  Media Speed   State       Proto
==================================================
   0   0   c00000   id    N16     No_Light    FC
(truncated)
16  16   c01000   id    N16     Online      FC  F-Port  10:00:00:90:fa:94:22:a8
  17  17   c01100   id    N16     Online      FC  F-Port  10:00:00:90:fa:94:22:a7
  18  18   c01200   id    N16     Online      FC  F-Port  10:00:00:90:fa:94:22:99
  19  19   c01300   id    N16     Online      FC  F-Port  10:00:00:90:fa:94:22:98
  (truncated)
  24  24   c01800   id    N16     Online      FC  F-Port  10:00:00:90:fa:94:36:20
  25  25   c01900   id    N16     Online      FC  F-Port  10:00:00:90:fa:94:36:1f
  26  26   c01a00   id    N16     Online      FC  F-Port  10:00:00:90:fa:94:36:1d
  27  27   c01b00   id    N16     Online      FC  F-Port  10:00:00:90:fa:94:36:1c
  28  28   c01c00   id    N16     Online      FC  F-Port  10:00:00:90:fa:94:36:29
  29  29   c01d00   id    N16     Online      FC  F-Port  10:00:00:90:fa:94:36:28
  30  30   c01e00   id    N16     Online      FC  F-Port  10:00:00:90:fa:94:36:1a
  31  31   c01f00   id    N16     Online      FC  F-Port  10:00:00:90:fa:94:36:19
  (truncated)
  40  40   c02800   id    N16     Online      FC  E-Port  (Trunk port, master is Port 42  )
  41  41   c02900   id    N16     Laser_Flt   FC
  42  42   c02a00   id    N16     Online      FC  E-Port  10:00:00:05:1e:f6:58:01
 "CGEN5_8__114017_LS1" (Trunk master)
  43  43   c02b00   id    N16     Online      FC  E-Port  (Trunk port, master is Port 42  )
  44  44   c02c00   id    N16     Online      FC  E-Port  (Trunk port, master is Port 47  )
  45  45   c02d00   id    N16     Online      FC  E-Port  (Trunk port, master is Port 47  )
  46  46   c02e00   id    N16     Online      FC  E-Port  (Trunk port, master is Port 47  )
  47  47   c02f00   id    N16     Online      FC  E-Port  10:00:00:27:f8:f3:3b:41 "Core-
X6-8_130013_LS1" (upstream)(Trunk master)
  (truncated)
  60  60   c03c00   id    N16     Online      FC  E-Port  (Trunk port, master is Port 63  )
  61  61   c03d00   id    N16     Online      FC  E-Port  (Trunk port, master is Port 63  )
  62  62   c03e00   id    N16     Online      FC  E-Port  (Trunk port, master is Port 63  )
  63  63   c03f00   id    N16     Online      FC  E-Port  10:00:88:94:71:ba:cd:e2 "Core-
X7-8_130239_LS1" (Trunk master)
```

The `tempshow` command shows the current temperature of the EM sensors.

```
switch:admin> tempshow
Sensor ID|Sensor Index|State  |Centigrade |Fahrenheit |
---------------------------------------------------------------------
1        |0           |Ok     |27         |80         |
2        |1           |Ok     |32         |89         |
3        |2           |Ok     |27         |80         |
4        |3           |Ok     |29         |84         |
```

```
5        |4          |Ok     |31         |87         |
6        |5          |Ok     |31         |87         |
7        |6          |Ok     |29         |84         |
8        |7          |Ok     |33         |91         |
9        |8          |Ok     |40         |104        |
10       |9          |Ok     |38         |100        |
11       |10         |Ok     |38         |100        |
```

Backing Up the Configuration

Back up the configuration on a regular basis to ensure that a complete configuration is available for downloading to a replacement switch. Perform the following steps:

1. Log on to the device as the admin user.
2. Back up the device configuration to an FTP server by entering the `configUpload` command as shown in the following example.

```
switchG620_2:admin> configupload
Protocol (scp, ftp, sftp, local) [ftp]:
Server Name or IP Address [host]:  192.168.0.1
User Name [user]: anonymous
Path/Filename [home dir>/config.txt]: dumps/supportsaves/user1/fos9k/release/d192_all
Section (all|chassis|FID# [all]):

configUpload complete: All selected config parameters are uploaded
```

   This command uploads the device configuration to the server, making it available for downloading to a replacement device if necessary.

   NOTE
   By default, the Virtual Fabric (VF) is enabled. You must use the `configupload -vf` command to upload configuration for the virtual fabric (all logical switches configured on the device). For detailed information on the `configupload/download` , refer to the in the *Brocade Fabric OS Administration Guide*.

Powering Down the Device

Perform the following steps to power down the device:

1. Shut down the Fabric OS software using the `sysshutdown` command.
2. Identify the power-on switches in the nonport-side of the device.
3. Power off both power supplies by setting each power switch to the “O” position.
4. Unplug the power cables from the power source before servicing the device or FRUs.

All devices are returned to their initial state the next time the switch is powered on.

Installing Transceivers and Cables

Precautions Specific to Transceivers and Cables

DANGER
All fiber-optic interfaces use Class 1 lasers.

DANGER
Use only optical transceivers that are qualified by Broadcom and comply with the FDA Class 1 radiation performance requirements defined in 21 CFR Subchapter I, and with IEC 60825 and EN60825. Optical products that do not comply with these standards might emit light that is hazardous to the eyes.

CAUTION
Before plugging a cable into any port, be sure to discharge the voltage stored on the cable by touching the electrical contacts to ground surface.

Cleaning the Fiber-Optic Connectors

To avoid problems with the connection between the fiber-optic transceiver (SFP+ or QSFP) and the fiber cable connectors, clean both connectors *each time you disconnect and reconnect them*. Dust can accumulate on the connectors and cause problems such as reducing the optic laser power.

To clean the fiber cable connectors, use a fiber-optic reel-type cleaner. When not using an SFP+ or QSFP connector, make sure to keep the protective covering in place.

Managing Cables

The minimum bend radius for a 50-micron cable is 2 inches under a full tensile load and 1.2 inches with no tensile load. Cables can be organized and managed in various ways, for example, using cable channels on the sides of the rack or patch panels to minimize cable management. Follow these recommendations:

NOTE
You should not use tie wraps with optical cables because they are easily overtightened and can damage the optic fibers.

CAUTION
Before plugging a cable into any port, be sure to discharge the voltage stored on the cable by touching the electrical contacts to ground surface.

- Plan for the proper rack space required for cable management before installing the switch.
- Leave at least 1m (3.28 ft) of slack for each port cable. This slack provides room to remove and replace the switch, allows for inadvertent movement of the rack, and helps prevent the cables from being bent to less than the minimum bend radius.
- If you are using Brocade ISL Trunking, consider grouping cables by trunking groups. The cables that are used in trunking groups must meet specific requirements, as described in the *Brocade Fabric OS Administration Guide*.
- For easier maintenance, label the fiber-optic cables and record the devices to which they connect.
- Keep LEDs visible by routing port cables and other cables away from the LEDs.
- Use hook-and-loop style straps to secure and organize fiber-optic cables.

Installing an SFP+ Transceiver

The device supports only transceivers that are qualified for Brocade products. For current information on qualified transceivers supported by this device, refer to the *Brocade Transceiver Support Matrix* and *Brocade Transceiver Modules*

on www.broadcom.com. If you use an unqualified transceiver, the `switchshow` command output shows the port in a Mod_Inv state. The issue is also logged in the system error log.

To insert an SFP+ transceiver, perform the following steps:

NOTE
The 16G and 32G SFP+ transceivers do not have bails. Always use the pull tab to insert or remove the transceivers, since the SFP might be hot.

1. Use the pull tab on the 16G and 32G SFP+ transceivers to help push the transceiver into the port. Transceivers are keyed so that they can only be inserted only with the correct orientation. If a transceiver does not slide in easily, ensure that it is correctly oriented. Push the correctly oriented transceiver into the port until it is firmly seated and the latching mechanism clicks.

   NOTE
   Each SFP+ transceiver has a 10-pad gold-plated PCB-edge connector on the bottom. The correct position to insert an SFP+ transceiver into an upper row of ports is with the gold edge down. The correct position to insert an SFP+ transceiver into a lower row of ports is with the gold edge up.

   Figure 26: Closeup of Installing a 32G SFP+ Transceiver into an Upper Port

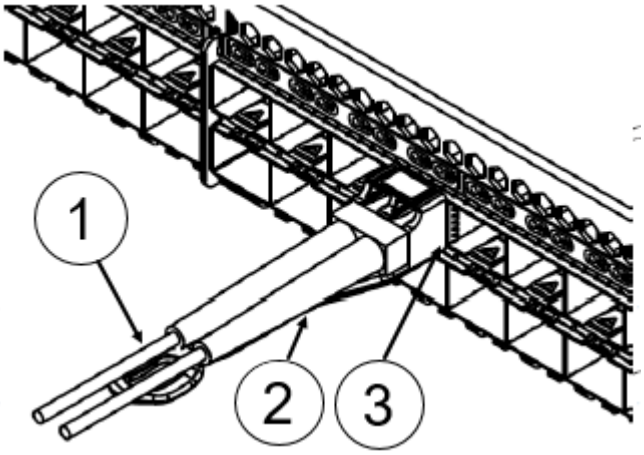

   1. Pull Tab
   2. SFP Cable
   3. SFP Transceiver

2. Position a cable so that the key (the ridge on one side of the cable connector) is aligned with the slot in the transceiver. Insert the cable into the transceiver until the latching mechanism clicks.

   NOTE
   Cables are keyed so that they can be inserted in only one way. If a cable does not slide in easily, ensure that it is correctly oriented. Do not insert any unsupported cable that is intended for another type of transceiver into a regular SFP+ transceiver. You may damage the cable as well as the transceiver.

Replacing an SFP+ Transceiver

Perform the following steps to remove an SFP+ transceiver and then install a new SFP+ transceiver:

NOTE
Replacing an SFP+ may cause disruption in the fabric or to the attached device.

NOTE
16G and 32G SFP+ transceivers have to pull tabs instead of bails. Always use the pull tab to insert or remove the SFP+ transceivers, since the SFP might be hot.

1. Remove any cables that are inserted into the transceiver.
2. Grasp the SFP+ transceiver pull tab and pull out the tab straight.

   NOTE
   Grasp the tab near the body of the transceiver to reduce the chances of bending the pull tab. Because the SFP may be hot, avoid touching it.

3. To insert the replacement transceiver, use the pull tab on the SFP+ transceiver to carefully push the transceiver into the port. Transceivers are keyed so that they can be inserted only with the correct orientation. If a transceiver does not slide in easily, ensure that it is correctly oriented.

   NOTE
   Each SFP+ transceiver has a 10-pad gold-plated PCB-edge connector on the bottom. The correct position to insert an SFP+ transceiver into the upper row of ports is with the gold edge down. The correct position to insert an SFP+ transceiver into the lower row of ports is with the gold edge up.

   Figure 27: Replacing an SFP+ Optical Transceiver in an Upper Port

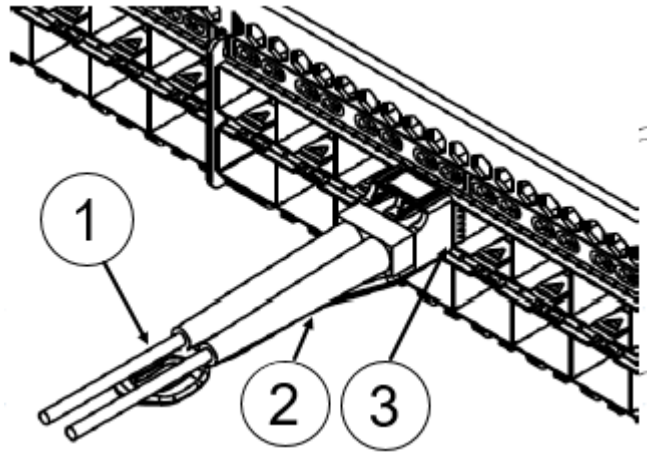

   1. Pull Tab
   2. SFP Cable
   3. SFP Transceiver

4. Position a cable so that the key (the ridge on one side of the cable connector) is aligned with the slot in the transceiver. Insert the cable into the transceiver until the latching mechanism clicks.

   Cables are keyed so that they can be inserted in only one way. If a cable does not slide in easily, ensure that it is correctly oriented.

Installing a QSFP Transceiver

Consider the following when installing these transceivers:

- The device supports only transceivers that are qualified for Brocade products. If you use an unqualified transceiver, the `switchshow` command output shows the port in a Mod_Inv state. The issue is also logged in the system error log.
- On Gen 6 platforms, 16G QSFPs may sometimes negotiate the link speed to 8G when a breakout cable is connected. To avoid this, disable and then re-enable the port that negotiated the speed to 8G, or connect the cable to the QSFP first and then install the QSFP into the switch.

To insert a QSFP transceiver, perform the following steps:

NOTE
QSFP transceivers have pull tabs rather than bails. Always use the pull tab to insert or remove the QSFP transceivers, since the QSFP might be hot.

1. Use the pull tab on these transceivers to help push the transceiver into the port. Transceivers are keyed so that they can be inserted only with the correct orientation. If a transceiver does not slide in easily, ensure that it is correctly oriented. Push the correctly oriented transceiver into the port until it is firmly seated and the latching mechanism clicks.

   Figure 28: Installing a QSFP Transceiver in an Upper Port

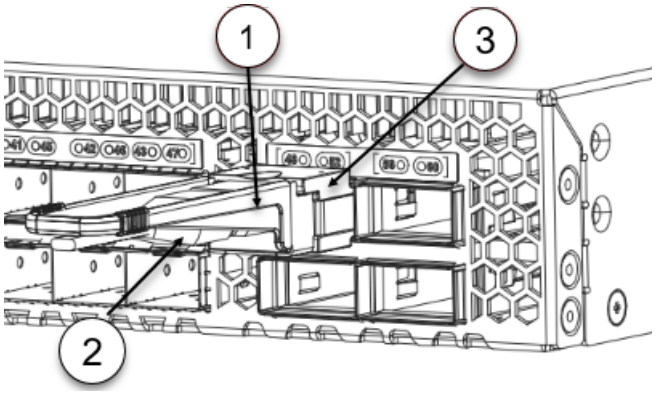

   1. Pull Tab
   2. QSFP Cable
   3. QSFP Transceiver

2. Position a cable so that the key (the ridge on one side of the cable connector) is aligned with the slot in the transceiver. Insert the cable into the transceiver until the latching mechanism clicks.

   NOTE
   Cables are keyed so that they can be inserted in only one way. If a cable does not slide in easily, ensure that it is correctly oriented. Do not insert any unsupported cable that is intended for another type of transceiver into a regular QSFP transceiver. You may damage the cable as well as the transceiver.

Replacing a QSFP Transceiver

NOTE
SFP+ transceivers are hot-swappable.

Consider the following when replacing these transceivers:

- The device supports only transceivers that are qualified for Brocade products. If you use an unqualified transceiver, the `switchshow` command output shows the port in a Mod_Inv state. The issue is also logged in the system error log.
- On the Brocade G620 Switch, 16G QSFPs may sometimes negotiate the link speed to 8G when a breakout cable is connected. To avoid this, disable and then re-enable the port that negotiated the speed to 8G, or connects the cable to the QSFP first, and then install the QSFP into the switch.

Complete the following steps to remove and then install a new QSFP transceiver:

NOTE
QSFP transceivers have pull tabs rather than bails. Always use the pull tab to insert or remove the QSFP transceivers, since the QSFP might be hot.

1. Remove any cables that are inserted into the transceiver.
2. Grasp the QSFP transceiver pull tab and gently pull the tab straight out.

   NOTE
   Grasp the pull tab near the body of the transceiver to reduce the chances of bending the pull tab. Because the QSFP may be hot, avoid touching it.

3. To insert the replacement transceiver, use the pull tab to carefully push the transceiver into the port. Transceivers are keyed so that they can be inserted only with the correct orientation. If a transceiver does not slide in easily, ensure that it is correctly oriented. Gently push the correctly oriented QSFP transceiver until the latching mechanism clicks.

   Figure 29: Replacing a QSFP Optical Transceiver

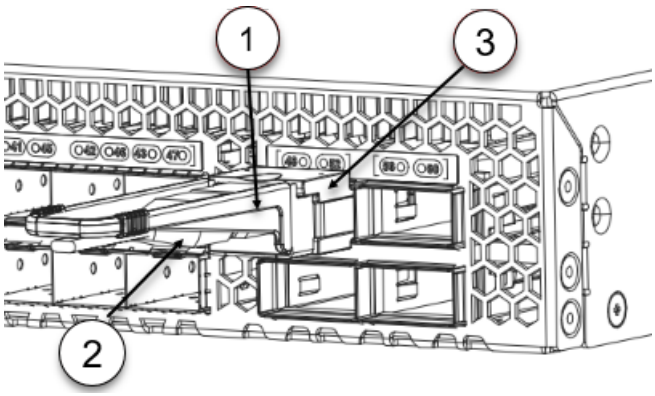

   1. Pull Tab
   2. QSFP Cable
   3. QSFP Transceiver

4. Position a cable so that the key (the ridge on one side of the cable connector) is aligned with the slot in the transceiver. Insert the cable into the transceiver until the latching mechanism clicks.

   NOTE
   Cables are keyed so that they can be inserted in only one way. If a cable does not slide in easily, ensure that it is correctly oriented.

Verifying the Operation of New Transceivers

You can use the following commands to verify if the transceivers are working correctly:

- `errDump`
- `fabricShow`
- `sfpShow`
- `switchShow`

Refer to the *Brocade Fabric OS Command Reference Manual* for output examples and descriptions.

Monitoring the Device

Interpreting Port-Side LEDs

System activity and status can be determined through the activity of the LEDs on the switch.

48 bicolor (green/amber) port status LEDs, one for each SFP+ port.

4 tri-color LEDs, one for each QSFP port on the switch. The QSFP LED flashes 1 to 4 times to indicate whether the focus is on port 0 (1 flash), port 1 (2 flashes), port 2 (3 flashes), or port 3 (4 flashes).

There are three possible LED states: no light, a steady light, and a flashing light. Flashing lights may be slow, fast, or flickering. The lights are green or amber. Sometimes, the LEDs may flash either of the colors during boot, POST, or other diagnostic tests. This is normal; it does not indicate a problem unless the LEDs do not indicate a healthy state after all boot processes and diagnostic tests are complete.

Figure 30: Brocade G620 Port-Side LEDs (Switch Type 162)

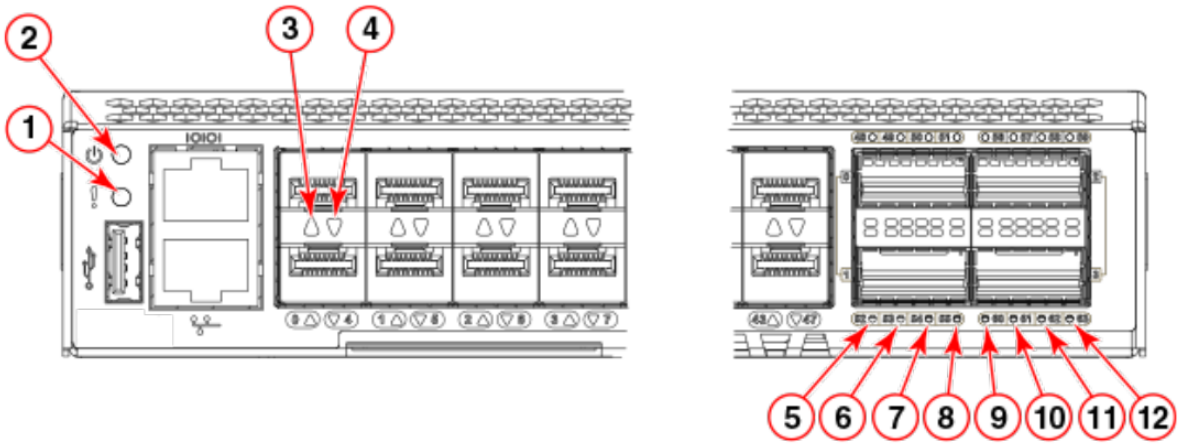

1. System Status LED
2. System Power LED
3. SFP+ (Upper) Port 0 Status LED
4. SFP+ (Lower) Port 4 Status LED
5. FC Port 52 (QSFP 1) Status LED
6. FC Port 53 (QSFP 1) Status LED
7. FC Port 54 (QSFP 1) Status LED
8. FC Port 55 (QSFP 1) Status LED
9. FC Port 60 (QSFP 3) Status LED
10. FC Port 61 (QSFP 3) Status LED
11. FC Port 62 (QSFP 3) Status LED
12. FC Port 63 (QSFP 3) Status LED

Figure 31: Brocade G620 Port-Side LEDs (Switch Type 183)

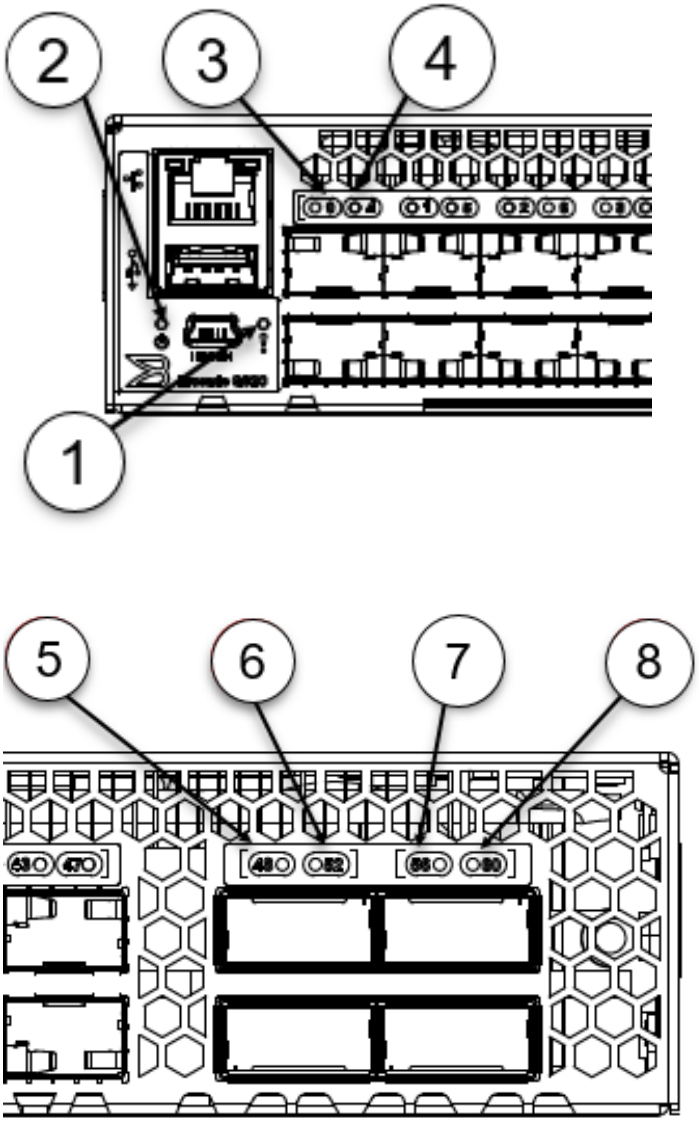

1. System Status LED
2. System Power LED
3. SFP+ (Upper) Port 0 Status LED
4. SFP+ (Lower) Port 4 Status LED
5. QSFP 0 (FC Ports 48 - 51) LED
6. QSFP 1 (FC Ports 52 - 55) LED
7. QSFP 2 (FC Ports 56 - 59) LED
8. QSFP 3 (FC Ports 60 - 63) LED

System Power LED

Use the following table to interpret the system power LED.

Table 11: System Power LED Patterns during Normal Operation

LED Color	Status of Hardware	Recommended Action
No light	The system is off, or there is an internal power supply failure.	Verify that the system is powered on, that the power cables are attached, and that your power source is live. If the system power LED is not green, the unit may be faulty. Contact your solution provider.
Steady green	The system is on, and power supplies are functioning properly.	No action is required.

System Status LED

Use the following table to interpret the system status LED.

Table 12: System Status LED Patterns during Normal Operation

LED Color	Status of Hardware	Recommended Action
No light	The system is off or there is no power.	Verify that the system is on and has completed booting.
Steady green	The POST and initialization have completed. The system is on and functioning properly.	No action is required.
Steady amber (for more than 5 seconds —can take over a minute to complete the POST)	The system is going through the power-up process.	No action is required.
Steady amber (for more than a few minutes)	Unknown state, boot failed, or faulty system. When the POST completes and the switch has failed, a steady amber color may result.	Perform the following steps: 1. Connect a serial cable to the system. 2. Reboot the system. 3. Check the failure indicated on the system console. 4. Contact your solution provider.
Flashing amber and green	Attention is required. Some variables can cause this status, including a single power supply failure, a fan failure, or one or more environmental ranges being exceeded.	Check the management interface and the error log for details on the cause of the status. Contact your solution provider.

Management Port LEDs

Use the following table to interpret the management port LEDs.

Table 13: Management Port LED Patterns during Normal Operation

LED Function/State	Status of Hardware
Link/Speed—Green LED is on	1000Mb/s link
Link/Speed—LED is off	10/100Mb/s link
Activity—Green LED is blinking	Presence of activity

FC Port Status LEDs

Use the following table to interpret the FC port status LEDs.

Table 14: FC Port Status LED Patterns during Normal Operation

LED Color	Status of Hardware	Recommended Action
No light	Indicates one of the following: • No signal or light carrier (media or cable) detected. • The device may be currently initializing. • The connected device is configured in an offline state.	• Verify that the power LED is on, and check the SFP+ and cable. • Verify that the device is not currently being initialized. • Verify the status of the connected device.
Steady green	The port is online (connected to an external device) but has no traffic.	No action is required.
Slow-flashing green (on for 1 second; then off for 1 second)	The port is online but is segmented because of a loopback cable or incompatible device connection.	Verify that the correct device is attached to the switch.
Fast-flashing green (on for 1/4 second; then off for 1/4 second)	The port is online, and an internal loopback diagnostic test is running.	No action is required.
Flickering green	The port is online, and frames are flowing through the port.	No action is required.
Steady amber	The port is receiving light or signal carrier, but it is not online yet.	No action is required.
Slow-flashing amber (on for 2 seconds; then off for 2 seconds)	The port is disabled because of diagnostics or the `portDisable` command.	Reset the port. The `portCfgPersistentDisable` command is persistent across reboots.
Fast-flashing amber (on for 1/2 second; then off for 1/2 second)	The SFP+ or port is faulty.	Reset the port. Replace the SFP+. Must be a Brocade-branded SFP+.

QSFP Port Status LEDs

For switch type 183, the QSFP LED is a tri-state color. It represents 4 ports. After 1 delimiter blink, the status of port 0 of the QSFP ports is displayed. After 2 delimiter blinks, the status of port 1 of the QSFP ports is displayed. After 3 delimiter blinks, the status of port 2 of the QSFP ports is displayed. After 4 delimiter blinks, the status of port 3 of the QSFP ports is displayed.

For switch type 162, there are independent LEDs for QSFP port status.

Use the following table to interpret the color of the QSFP port.

Table 15: QSFP Port Status LED Patterns during Normal Operation

LED Color	Status of Hardware	Recommended Action
No light	Indicates one of the following: • No signal or light carrier (media or cable) detected. • The device may be currently initializing. • The connected device is configured in an offline state.	• Verify that the power LED is on, and check the QSFP and cable. • Verify that the device is not currently being initialized. • Verify the status of the connected device.
Steady green	Port is online (connected to an external device) but has no traffic.	No action is required.
Slow-flashing green (on for 1/2 second; then off for 1/2 second)	Port is online but segmented because of a loopback cable or incompatible device connection.	Verify that the correct device is attached to the switch.
Fast-flashing green (on for 1/4 second; then off for 1/4 second)	Port is online, and an internal loopback diagnostic test is running.	No action is required.
Flickering green	Port is online, and data is flowing through the port.	No action is required.
Steady amber	Port is receiving light or signal carrier, but it is not online yet.	No action is required.
Slow-flashing amber (on for 2 seconds; then off for 2 seconds)	Port is disabled because of diagnostics or the `portDisable` command.	Reset the port. The `portCfgPersistentDisable` command is persistent across reboots.
Fast-flashing amber (on for 1/2 second; then off for 1/2 second)	QSFP or port is faulty.	Reset the port. Replace the QSFP. Must be a Brocade-branded QSFP.
Blinking White (White delimiter)	White LEDs blink once to indicate traffic or port status on QSFP port 0.	
	White LEDs blink twice to indicate traffic or port status on QSFP port 1.	
	White LEDs blink three times to indicate traffic or port status on QSFP port 2.	
	White LEDs blink four times to indicate traffic or port status on QSFP port 3.	

NOTE
If a port is configured as an individual SFP+ FC port on the other end using break-out cables, then the four individual port status LEDs for each QSFP should be monitored.

Interpreting Nonport-Side LEDs

Use the following table to interpret the power supply and fan assembly status LED during normal operation.

Table 16: Power Supply and Fan Assembly Status LED Patterns during Normal Operation

LED Color	Description	Action Required
No light	The power supply and fan assembly are not receiving power or are off.	Verify that the power supply and fan assembly are on and seated and that the power cord is connected to a functioning power source.
Steady green	The power supply and fan assembly are operating normally.	No action is required.
Flashing green (for more than 5 seconds)	The power supply and fan assembly are faulty for one of the following reasons: • The assembly is switched off (flashing for ~ 5 seconds, then off). • The power cable is disconnected (flashing for ~ 5 seconds, then off). • The power supply and fan assembly have failed. When the device is first powered on, the power supply and fan assembly status LED flashes until the POST has completed.	Try one of the following: • Check the power cable connection. • Verify that the assembly is powered on. • Replace the power supply and fan assembly.

Interpreting POST Results

Each time the switch is powered on, rebooted, or reset, it performs a power-on self-test (POST). The total boot time with the POST can be several minutes. The POST can be omitted after subsequent reboots by using the `fastboot` command or entering the `diagDisablePost` command to persistently disable the POST. The success or failure results of the diagnostic tests that run during the POST can be monitored through LED activity, the error log, or the command line interface. During the POST, the LEDs flash different colors.

The POST performs the following tasks:

- Conducts preliminary POST diagnostics.
- Initializes the operating system.
- Initializes the hardware.
- Runs diagnostic tests on several functions, including the circuitry, port functionality, memory, statistics counters, and serialization.

Perform the following steps to determine whether the POST completed successfully and whether any errors were detected:

1. Verify that the LEDs on the device indicate that all components are healthy. If one or more LEDs do not display a healthy state:
   a) Verify that the LEDs are not set to "beacon" (this can be determined through the `switchShow` command or Web Tools).
   b) Follow the recommended action for the observed LED behavior.
2. Verify that the `diagShow` command displays that the diagnostic status for all ports in the device is OK.
3. Review the system log for errors. Errors that are detected during the POST are written to the system log, which can be viewed by using the `errShow` command.

Interpreting Boot Results

Boot performs the following tasks after POST completes:

- Performs universal port configuration.
- Initializes links.
- Analyzes the fabric. If any ports are connected to other switches, the switch participates in a fabric configuration.
- Obtains a domain ID and assigns port addresses.
- Constructs unicast routing tables.
- Enables normal port operation.

Running Diagnostic Tests

In addition to the POST, switch firmware includes diagnostic tests to help you troubleshoot the hardware and firmware. These diagnostics test the internal connections and circuitry, the fixed media, and the transceivers and cables in use.

The tests are implemented by command, either through a Telnet or SSH session or through a terminal setup for a serial connection to the device. Some tests require that the ports be connected by external cables to allow diagnostics to verify the serializer or deserializer interface, transceiver, and cable. Some tests require loopback plugs.

Diagnostic tests are run at supported link speeds depending on the speed of the link being tested and the type of port.

NOTE
Diagnostic tests may temporarily lock the transmit and receive speed of the links.

NOTE
Power-cycle the device after completing offline diagnostics tests.

Power Supply and Fan Assembly

Power Supply and Fan Assembly Overview

The power supply and fan assembly units in the Brocade G620 chassis can be removed and replaced without special tools. The device can continue operating during the replacement.

Figure 32: AC Power Supply and Fan Assembly

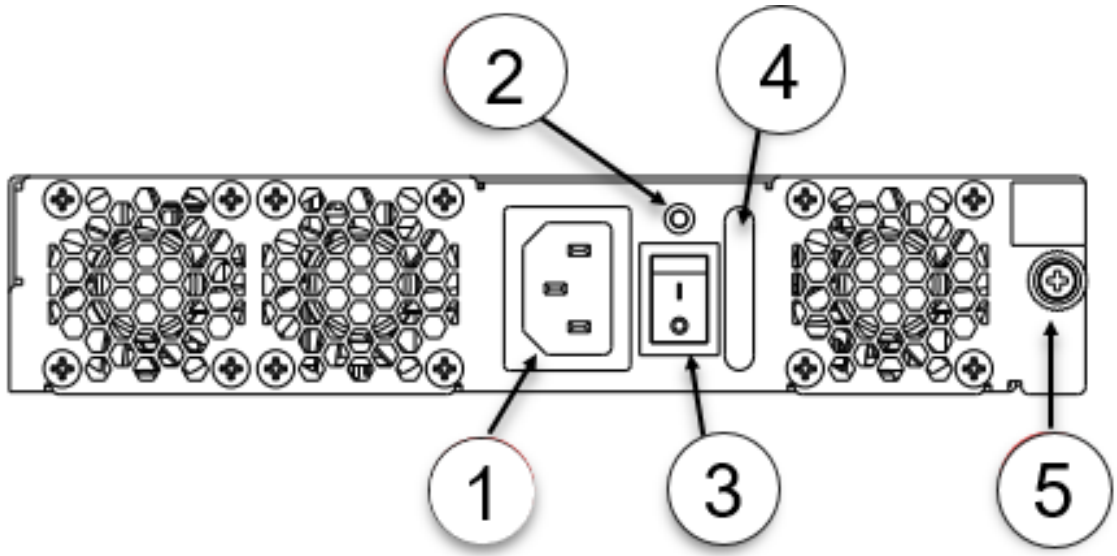

1. AC Power Cable Receptacle
2. Power Supply and Fan Assembly Status LED
3. Power-On/Off Switch
4. Power Supply and Fan Assembly Handle
5. Captive Screw

Figure 33: DC Power Supply and Fan Assembly

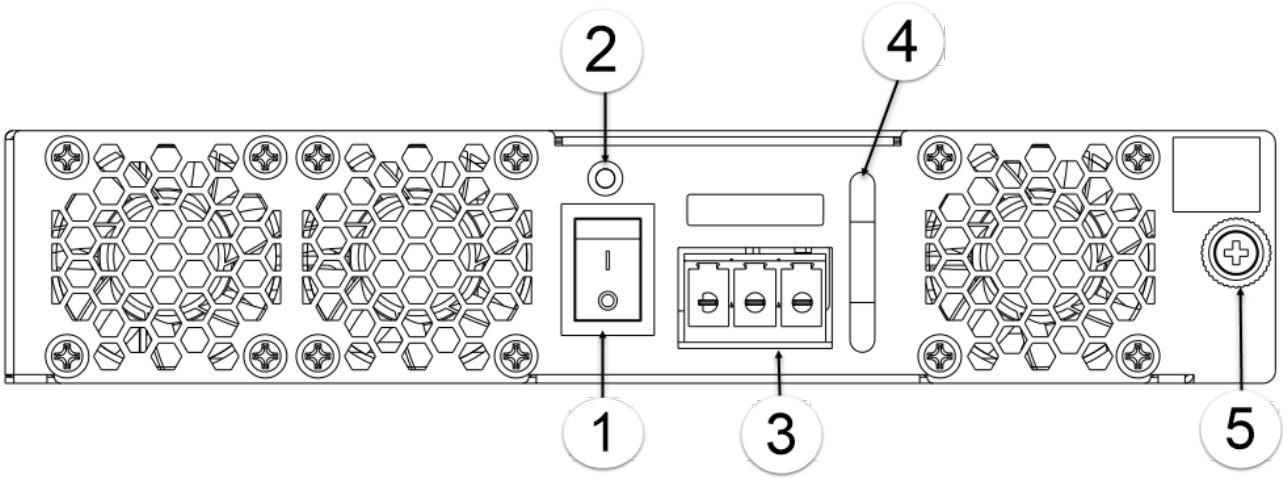

1. Power-On/Off Switch
2. Power Supply and Fan Assembly Status LED
3. DC Power Cable Receptacle
4. Power Supply and Fan Assembly Handle
5. Captive Screw

The device supports the following types of power supplies.

- AC or DC power supply with nonport-side air exhaust. This unit moves the air from the port side to the nonport side of the device.
- AC or DC power supply with nonport-side air intake. This unit moves the air from the nonport side to the port side of the device.

NOTE
The two power supply and fan assemblies that are concurrently installed in the chassis must be of the same power type, model (airflow direction), and part number. If the airflow directions are different, an error is generated on the console.

NOTE
The power supply and fan assembly units are hot-swappable if they are replaced one at a time. They are identical and fit into either slot.

NOTE
The device can operate all the ports with one power supply and fan assembly unit if you do not require redundancy.

The device fans are fixed inside the combined power supply and fan assemblies to provide the necessary airflow to cool the whole system. The system software sets the fan speed and measures it through the tachometer interface.

Precautions Specific to the Power Supply and Fan Assemblies

DANGER
Make sure that the power source circuits are properly grounded, and then use the power cord supplied with the device to connect it to the power source.

DANGER
If the installation requires a different power cord than the one supplied with the device, make sure you use a power cord displaying the mark of the safety agency that defines the regulations for power cords in your country. The mark is your assurance that the power cord can be used safely with the device.

CAUTION
Disassembling any part of the power supply and fan assembly voids the warranty and regulatory certifications. There are no user-serviceable parts inside the power supply and fan assembly.

CAUTION
Ensure that the airflow direction of the power supply unit matches that of the installed fan tray. The power supplies and fan trays are clearly labeled with either a green arrow with an "E" or an orange arrow with an "I."

CAUTION
If you do not install a module or a power supply in a slot, you must keep the slot filler panel in place. If you run the chassis with an uncovered slot, the system will overheat.

CAUTION
Use a separate branch circuit for each power cord, which provides redundancy in case one of the circuits fails.

CAUTION
To prevent damage to the chassis and components, never attempt to lift the chassis using the fan or power supply handles. These handles were not designed to support the weight of the chassis.

NOTE
The equipment installation must meet NEC/CEC code requirements. Consult local authorities for regulations.

NOTE
If the ambient temperature is above the recommended operational limits, the power supply units shutdown, which in turn shuts down the device without any warning message.

Identifying the Airflow Direction

The power supply and fan assemblies are identified by the following airflow directions:

- **Intake power supply and fan assembly with an orange "I" label or without any label**: Pulls air from the nonport side of the switch and exhausts it out the port side.

	• Nonport-side air intake • Port-side air exhaust • Back-to-front (nonport-side to port-side) airflow • Part numbers ending with -R

- **Exhaust power supply and fan assembly with a green "E" label**: Pulls air from the port side of the switch and exhausts it out the nonport side.

	• Nonport-side air exhaust • Port-side air intake • Front-to-back (port-side to nonport-side) airflow • Part numbers ending with -F

AIRFLOW and ENCR Error Monitoring

Starting with FOS 9.0.0, MAPS added support for the following monitoring systems:

- FAN_AIRFLOW_MISMATCH
- ENCR_BLK
- ENCR_DISC
- ENCR_SHRT_FRM

Power Supply and Fan Assembly Fault Indicators

Use one of the following fault indicators to determine the status of the power supply and fan assemblies:

- Power supply and fan assembly status LED. See Interpreting Nonport-Side LEDs to interpret the meaning of LED operation.
- The **Power Status** icon in Web Tools. Click the icon to display status.
- The `psShow` command, which displays the power supply and fan assembly status, as shown in the following example:

```
Device:admin> psshow
Power Supply #1 is OK
Power Supply #2 is OK
```

Power Supply and Fan Assembly Task Guide

You can perform an easy set of steps to install or replace one or both assemblies. By default, both power supply and fan assemblies are installed in the device.

Installing an Additional Power Supply and Fan Assembly (Hot-Install)

If your device is up and running with a single power supply and fan assembly and you want to install an extra power supply, perform the following steps:

1. Remove the existing filler panel.
2. Insert the new power supply and fan assembly.
3. Tighten the thumb screw to ensure that the power supply is fully seated.
4. Power on the power supply and fan assembly.
5. Verify the power supply and fan assembly status LED.

Replacing a Power Supply and Fan Assembly (Hot-Swap)

If your device is up and running with two power supply and fan assemblies, but one of them must be replaced, perform the following steps to replace it:

1. Power down the power supply and fan assembly that must be replaced.

   NOTE
   Setting the power switch to the "O" position does not shut down the fans in the power supply and fan assembly.
2. Remove the power supply and fan assembly that you are replacing.
3. Insert the new power supply and fan assembly, tighten the thumb screw, and then plug in the AC or DC power cord.
4. Power on the power supply and fan assembly.
5. Verify the power supply and fan assembly status LED.

Replacing Both Power Supply and Fan Assemblies (Cold-Swap)

If your device is up and running with both power supply and fan assemblies, but you want to replace both of them, perform the following steps:

1. Shut down the system using the `sysShutdown` command.
2. Power down both the power supply and fan assemblies.

3. Remove the old/failed power supply and fan assemblies.
4. Insert the new power supply and fan assemblies, tighten the thumb screw, and then plug in the AC or DC power cord.
5. Power on both the power supply and fan assemblies.
6. Verify operation using the power supply and fan assembly status LEDs.

Time and Items Required

Installing or removing and replacing a power supply and fan assembly should require less than 5 minutes to complete.

The following items are required to replace a power supply and fan assembly:

- New power supply and fan assembly (must have the same airflow direction as the power supply and fan assembly being replaced).
- #1 Phillips-head screwdriver.

Recording Critical Information about the Power Supply and Fan Assembly

You can use the following commands to record the power supply and fan assembly configuration and operation information:

- `chassisshow`
- `fanshow`
- `historyshow`
- `psshow`
- `sensorshow`
- `tempshow`

NOTE
When you execute the `chassisshow` command, the power usage is displayed for each PSU section. The power usage value is the value that is displayed from one PSU. The power usage value that is displayed in the other PSU is redundant.

Refer to the *Brocade Fabric OS Command Reference Manual* for output examples and descriptions.

Connecting an AC Power Cord

Use the supplied power cords. Ensure that the facility power receptacle is the correct type, supplies the required voltage, and is properly grounded.

Perform the following steps to connect to AC power:

1. Connect the power cords to both power supplies.
2. Route the cords so that they are out of the way when connected to the power source. Ensure that the power cords have a minimum service loop of 15.2 cm (6 in.) available and are routed to avoid stress.
3. Plug the other end of the cable into a power source on separate circuits to protect against failure. The power supplies to power up when they are plugged in.

NOTE
Power is supplied to the device when the first power supply is connected and powered on.

Connecting a DC Power Cord to a 250W DC Power Supply

Complete the following steps to connect a DC power cord to a 250W DC power supply.

1. Remove the DC wiring assembly from the front of each DC power supply.

   Figure 34: DC Wiring Assembly

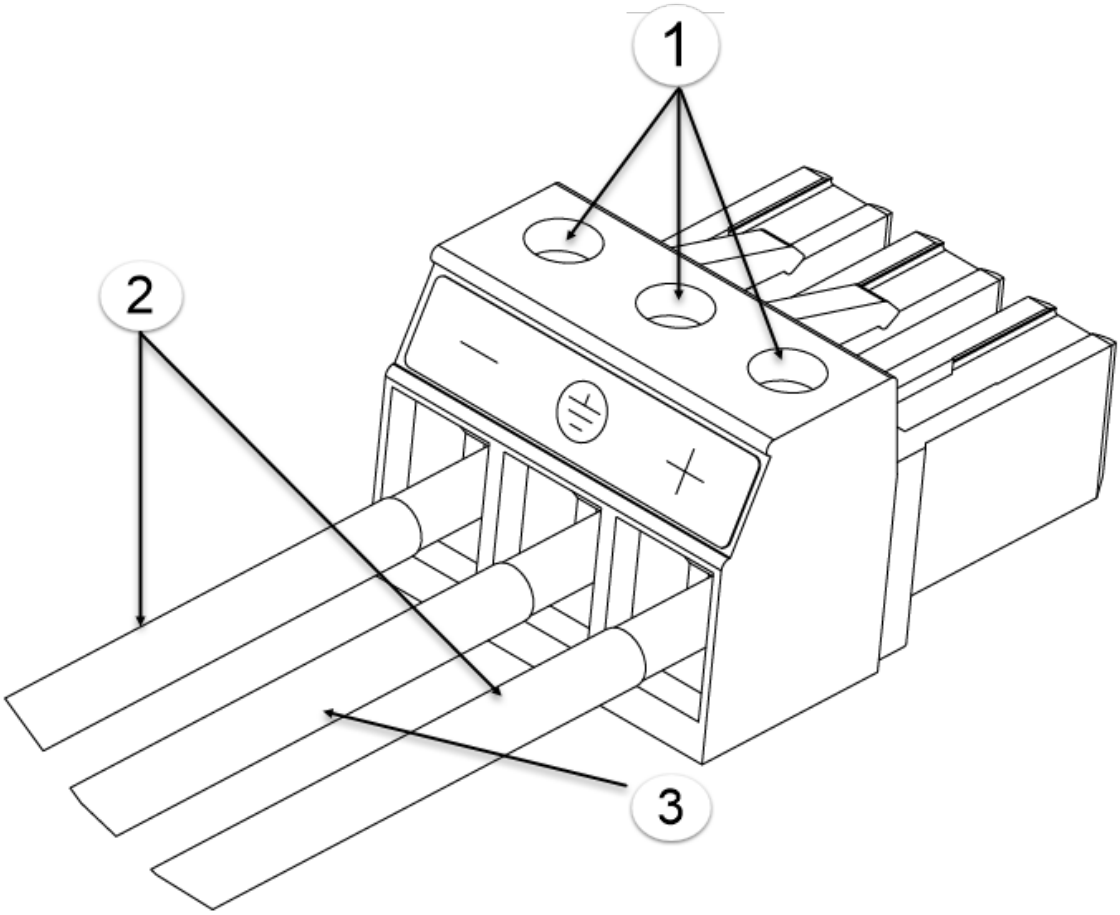

   1. Wire Tightening Screws
   2. DC Power Source Wires
   3. Earth Ground Wire

2. Loosen the wire tightening screws and insert the wires from the DC power source into the wiring assembly. Connect the –48V source cable to the negative terminal and the 0V cable to the positive terminal as marked on the harness assembly.
3. Tighten the wire tightening screws and reinstall the wiring assembly onto the power supply.
4. Connect the wires from the power supply wiring assembly to your DC power source. See Precautions Specific to the Power Supply and Fan Assemblies.
5. Follow these additional precautions when making connections to DC power supplies:

   NOTE
   The equipment installation must meet NEC/CEC code requirements. Consult local authorities for regulations.

CAUTION
For the DC input circuit to the system, make sure there is a 10-Amp circuit breaker, a maximum of 60 VDC, double pole, on the input terminal block to the power supply. The input wiring for connection to the product must be copper wire, 16 AWG, marked VW-1, and rated a minimum of 90°C.

CAUTION
DC return must be isolated from the chassis ground (DC-I) when connections to the power supply are made.

CAUTION
For a DC system, use a grounding wire of at least 16 American Wire Gauge (AWG). The grounding wire should be attached to the DC input connector; the other end connects to the building ground.

Removing a Power Supply and Fan Assembly

Complete the following steps to remove a faulty power supply and fan assembly.

1. To leave the device in service while removing a power supply and fan assembly, verify that the other power supply and fan assembly (the one not being replaced) has been powered on for at least four seconds and has a steady green LED.

   Figure 35: AC Power Supply and Fan Assembly

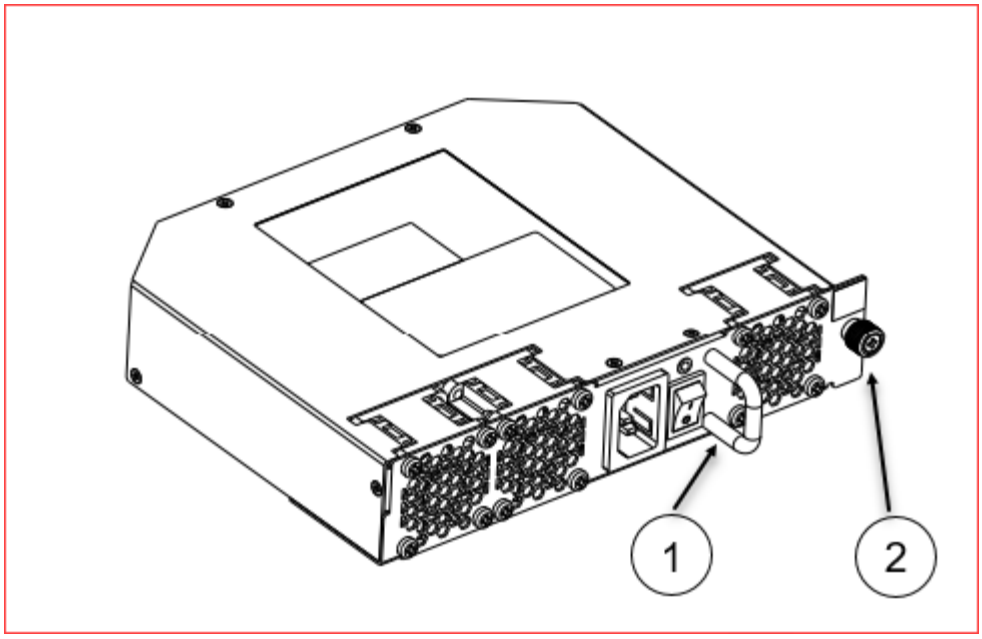

   1. Power Supply and Fan Assembly Handle
   2. Captive Screw

Figure 36: DC Power Supply and Fan Assembly

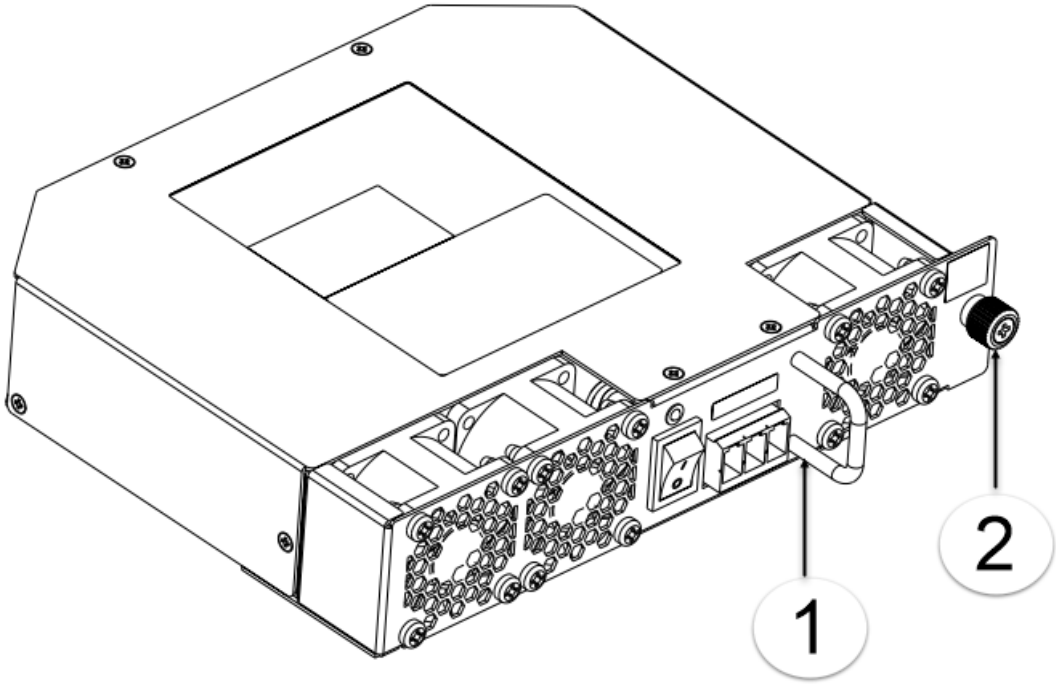

1. Power Supply and Fan Assembly Handle
2. Captive Screw

2. Power off the power supply to be replaced by flipping the AC or DC power switch to the off position (the “O” symbol). The fans in the other power supply automatically switch to high speed to maintain adequate cooling.
3. Unplug the power cord from the power supply and fan assembly that is being replaced.
4. Using a Phillips screwdriver, unscrew the captive screw.
5. Remove the power supply and fan assembly from the chassis by pulling the handle out and away from the chassis.

Replacing the Power Supply and Fan Assembly

Remove a failed combined power supply and fan assembly, install a new combined FRU, and verify that the replacement is successful.

CAUTION
The power supply switch must be in the off position when you insert the power supply into the chassis. Damage to the switch can result if a live power supply is installed.

1. Flip the power switch to the off position (O).
2. Unplug the power cord from the combined power supply and fan assembly that you are replacing.
3. Unscrew the captive screw on the power supply and fan assembly that you are replacing using the Phillips screwdriver.
4. Remove the power supply and fan assembly from the chassis by pulling the handle out and away from the chassis.
5. Ensure that the new power supply and fan assembly have the same part number as the FRU being replaced.

Figure 37: Orientation of the AC or DC Power Supply and Fan Assembly

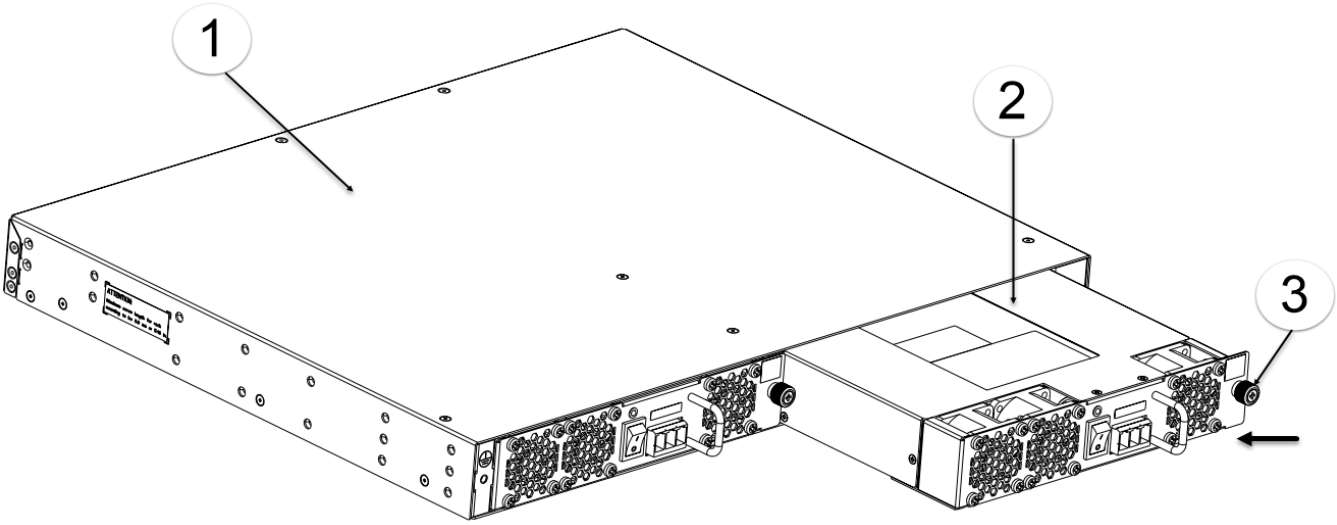

1. Brocade G620 Chassis
2. AC or DC Power Supply and Fan Assembly
3. Captive Screw

6. Install the new FRU in the chassis:
   a) Orient the new power supply and fan assembly with the captive screw on the right.
   b) Gently push the power supply and fan assembly into the chassis until it is firmly seated.

   CAUTION
   Do not force the installation. If the power supply and fan assembly do not slide in easily, ensure that it is correctly oriented before continuing.

   c) Using a Phillips screwdriver, secure the power supply and fan assembly to the chassis by tightening the captive screw.
7. Verify that the power supply and fan assembly status LED is steady green to indicate normal operation. See Interpreting Port-Side LEDs.

Inserting a New Power Supply and Fan Assembly

Complete the following steps to insert a new power supply and fan assembly into the chassis.

CAUTION
The power supply switch must be in the off position when you insert the power supply into the chassis. Damage to the switch can result if a live power supply is installed.

NOTE
The new power supply and fan assembly must have the same part number and airflow label (or lack thereof) as the power supply and fan assembly already installed.

1. To leave the device in service while installing a power supply and fan assembly, verify that the other power supply and fan assembly (the one already installed) has been powered on for at least four seconds and has a steady green LED.
2. Using a Phillips screwdriver, unscrew the captive screw of the filler panel that is located in the empty power supply and fan assembly slot.
3. Orient the new power supply and fan assembly with the captive screw on the right, as shown in the following figure.

   Do not force the installation. If the power supply and fan assembly do not slide in easily, ensure that it is correctly oriented before continuing.

CAUTION
Carefully follow the mechanical guides on each side of the power supply slot and make sure the power supply is properly inserted in the guides. Never insert the power supply upside down.

Figure 38: Inserting an AC Power Supply and Fan Assembly

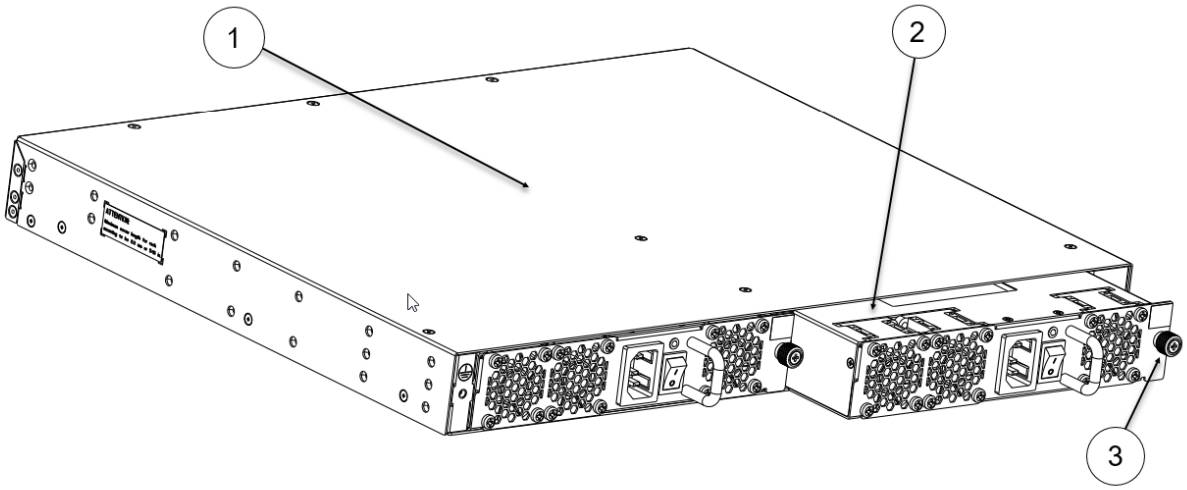

1. Device
2. AC Power Supply and Fan Assembly
3. Captive Screw

Figure 39: Inserting a DC Power Supply and Fan Assembly

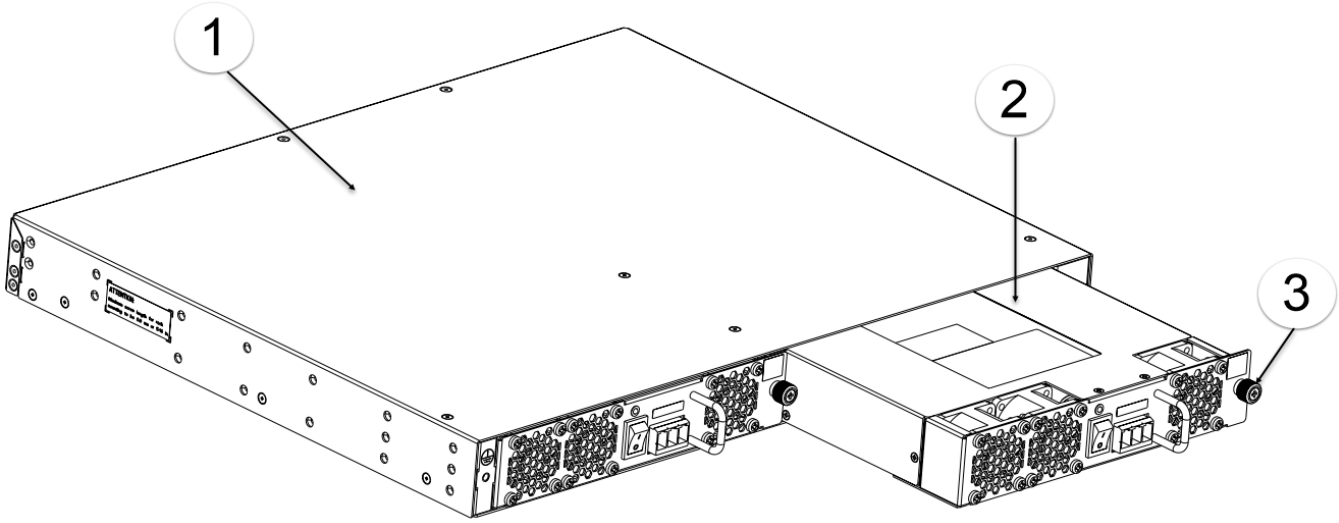

1. Device
2. DC Power Supply and Fan Assembly
3. Captive Screw

4. Gently push the power supply and fan assembly into the chassis until it is firmly seated.
5. Using the Phillips screwdriver, secure the power supply and fan assembly to the chassis by tightening the captive screw.
6. Plug the power cord into the power supply and fan assembly and power on the unit by flipping the PSU power switch to the on position (the “I” symbol).
7. Verify that the LED on the new power supply and fan assembly displays a steady green light while the device is operating. If the LED is not a steady green, ensure that the power supply is securely installed and seated properly.
8. Optional: Enter `psshow` to display the PSU status. The power supply and fan assembly status can also be viewed using Web Tools.

Verifying the Operation of the Power Supply and Fan Assemblies

You can use the following commands to verify that the power supply and fan assemblies are operational:

- `errDump`
- `fanShow`
- `psShow`
- `switchShow`

Refer to the *Brocade Fabric OS Command Reference Manual* for output examples and descriptions.

Brocade G620 Switch Technical Specifications

The following tables highlight the features and specifications for the Brocade G620 Switch.

System Specifications

System Component	Description
Enclosure	1U, port-side back-to-front exhaust airflow, power from the back.
Power inlet	C14 (AC power supply), Phoenix Contact 1804917 (DC power supply) accepts 10-14AWG/size per local electrical code.
Power supplies	Dual, hot-swappable, AC, or DC input power supplies with integrated system cooling fans.
Fans	Three fans are integrated into each power-supply and fan assembly.
Cooling	Port side to the nonport side of the switch (nonport-side exhaust) and nonport side to the port side (port-side exhaust).
System architecture	Nonblocking shared memory switch.
Port-to-port latency	Less than 900 nanoseconds (including FEC) with no contention (destination port is free).

Fibre Channel Ports

System Component	Description
Fibre Channel ports	48 SFP+ ports that support any combination of short wavelength (SWL) and long wavelength (LWL) or extended long wavelength (ELWL) optical media. 4 QSFP ports that support 16G and 32G QSFP transceivers. The SFP+ ports are capable of auto-negotiating to 4, 8, 16, or 32G speeds depending on the SFP+ model and the minimum supported speed of the optical transceiver at the other end of the link. • 4G, 8G, and 16G performance is enabled by 16G SFP+ transceivers if the other end of the connection has a minimum speed of 4G. • 8G, 16G, and 32G performance is enabled by 32G SFP+ transceivers if the other end of the connection has a minimum speed of 8G. 2G, 4G, and 8G transceivers are not supported.
ANSI Fibre Channel protocol	FC-PH (Fibre Channel Physical and Signaling Interface standard).
Modes of operation	Fibre Channel Class 2 and Class 3.
Fabric initialization	Complies with FC-SW-3 Rev. 6.6.
Fibre Channel over IP (FCIP)	Complies with FC-IP 2.3 of the FCA profile.
Port status	Bicolor LED (amber/green).

Other Ports

System Component	Description
Serial console port	One three-wire (Tx, Rx, Gnd) UART serial port
Ethernet management port	One 1000/100/10Mb/s Ethernet port
USB port	One external USB port

LEDs

System Component	Description
System power LED	One green system power status LED (upper) on the port side.
System status LED	One bicolor (green/amber) system status LED (lower) on the port side.
Ethernet port speed LED	One status LED on the right of the RJ-45 connector. Glows green for 1000Mb/s and off for 100/10Mb/s.
Ethernet port activity LED	One link activity LED on the left of the RJ-45 connector.
Serial console port LEDs	The serial console port LEDs remain off always, even when a cable is inserted and the link is active.
FC port status LEDs	48 bicolor (green/amber) port status LEDs, one for each SFP+ port.
QSFP port status LEDs	4 tricolor LEDs, one for each QSFP port on the switch. The QSFP LED flashes 1 to 4 times to indicate whether the focus is on port 0 (1 flash), port 1 (2 flashes), port 2 (3 flashes), or port 3 (4 flashes).
Power-supply and fan-assembly status LEDs	One green power-supply and fan-assembly status LED on each power supply and fan assembly on the nonport side of the switch.

Cables, Adapters, and Connectors

The hardware that is required for the serial connection depends on the SKU number.

System Component	Description
Serial cable	RJ-45 console cable.
RJ-45 to mini-USB adapter	RJ-45 to mini-USB for the console cable.
RJ-45 connector	RJ-45 connector for the serial port.

Weight and Physical Dimensions

Empty weight refers to the device with two power-supply and fan assemblies that are installed but no SFP+ or QSFP transceivers.

Model	Height	Width	Depth	Weight (Empty)	Weight (Fully Loaded)
Brocade G620 Switch	4.39 cm (1.73 in.)	44.00 cm (17.32 in.)	35.56 cm (14.00 in.)	7.71 kg (17.00 lb)	8.53 kg (18.80 lb)

Environmental Requirements

Condition	Operational	Nonoperational
Ambient temperature	0°C to 40°C (32°F to 104°F)	–25°C to 70°C (–13°F to 158°F)
Relative humidity (noncondensing)	10% to 85% at 40°C (104°F)	10% to 90% noncondensing
Altitude (above sea level)	0m to 3000m (9842 feet)	0 to 12,000m (39,370 feet)
Shock	20.0G, 6 ms, half-sine wave	33.0G, 11 ms, half-sine wave, 3G axis
Vibration	0.25G sine, 0.4 grams random, 5–500 Hz	5 Hz at 0.5 grams, 10–500 Hz at 1.0 grams (sine vibration); 3–500 Hz at 1.12 grams (random vibration)

Condition	Operational	Nonoperational
Airflow	Maximum: 71.36 cmh (42 cfm) Nominal: 59.47 cmh (35 cfm)	N/A
Operating noise	Maximum: 65 dB	N/A

Power Supply Specifications (Per PSU)

Power Supply Model	Maximum Output Power Rating (DC)	Input Voltage	Input Line Frequency	Maximum Input Current	Input Line Protection	Maximum Inrush Current
XBR-G250WPSAC-F	250W	100–240 VAC (nominal) 90–264 VAC (range)	50/60 Hz (nominal) 47–63 Hz (range)	3.5A	Line fused	50A peak @ 240 VAC for <10 ms, 10–150 ms, <15A peak. 50A peak @ 240 VAC at cold start for <10 ms. 15A peak for cycles 10–150 ms. <3.5A peak for >150 ms.
XBR-G250WPSAC-R	250W	100–240 VAC (nominal) 90–264 VAC (range)	50/60 Hz (nominal) 47–63 Hz (range)	3.5A	Line fused	50A peak @ 240 VAC for <10 ms, 10–150 ms, <15A peak. 50A peak @ 240 VAC at cold start for <10 ms. 15A peak for cycles 10–150 ms. <3.5A peak for >150 ms.
XBRG250WPSDCR	250W	48 VDC (nominal) 40–60 VDC (range)	N/A	7.1A	48V (+) & return (–) fused	50A peak for any initial current surge or spike of 10 ms or less

Data Port Specifications (Fibre Channel)

Model Name	Port Numbers	Media Type	Description
Brocade G620 Switch	0 to 47	10G, 16G, or 32G SFP+ optical ports	Can be an F_Port, N_Port, E_Port, or EX_Port.
	48 to 63	4 x 16G (64G) or 4 x 32G (128G) QSFP optical ports	Can be an F_Port, E_Port, or EX_Port.

Fibre Channel Data Transmission Ranges

Port Speed (G)	Cable Size (Microns)	Short Wavelength (SWL)	Long Wavelength (LWL)	Extended Long Wavelength (ELWL)
4	50	150m (492 ft) (OM2) 380m (1264 ft) (OM3) 400m (1312 ft) (OM4)	N/A	N/A
	62.5	70m (229 ft)	N/A	N/A
	9	N/A	30 km (18.6 miles)	N/A
8	50	50m (164 ft) (OM2) 150m (492 ft) (OM3) 190m (623 ft) (OM4)	N/A	N/A

Port Speed (G)	Cable Size (Microns)	Short Wavelength (SWL)	Long Wavelength (LWL)	Extended Long Wavelength (ELWL)
	62.5	21m (68 ft)	N/A	N/A
	9	N/A	10 km (6.2 miles)	N/A
10	50	82m (269 ft) (OM2) 300m (984 ft) (OM3) 550m (1804 ft) (OM4)	N/A	N/A
	62.5	33m (108 ft)	N/A	N/A
	9	N/A	10 km (6.2 miles)	N/A
16	50	35m (115 ft) (OM2) 100m (328 ft) (OM3) 125m (410 ft) (OM4)	N/A	N/A
	62.5	15m (49 ft)	N/A	N/A
	9	N/A	10 km (6.2 miles)	N/A
32	50	70m (230 ft) (OM3) 100m (328 ft) (OM4)	N/A	N/A
	62.5	N/A	N/A	N/A
	9	N/A	10 km (6.2 miles)	N/A

Pinout Mini-USB

NOTE
These specifications are for connectors on Brocade platforms only.

Pin Number	Mini-USB UART
1	Pull down with 100K resister
2	UART1_RXD receiver data
3	UART1_TXD transmit data
4	GND
5	GND
6	GND
7	GND

Serial Port Specifications (Protocol)

Parameter	Value
Baud	9600
Data bits	8
Parity	None
Flow control	None
Stop bits	1

Regulatory Statements

BSMI Statement (Taiwan)

警告使用者：
這是甲類的資訊產品，在居住的環境中使用時，可能會造成射頻干擾，
在這種情況下，使用者會被要求採取某些適當的對策。

Warning:

This is a Class A product. In a domestic environment, this product may cause radio interference, in which case the user may be required to take adequate measures.

Canadian Requirements

This Class A digital apparatus meets all requirements of the Canadian Interference-Causing Equipment Regulations, ICES-003 Class A.

Cet appareil numérique de la classe A est conforme à la norme NMB-003 du Canada.

CE Statement

ATTENTION
This is Class A product. In a domestic environment, this product may cause radio interference, in which case the user may be required to take adequate measures.

The standards compliance label on this device contains the CE mark, which indicates that this system conforms to the provisions of the following European Council directives, laws, and standards:

- Electromagnetic Compatibility (EMC) Directive 2014/30/EU
- Low Voltage Directive (LVD) 2014/35/EU
- EN 55032/EN 55024 (European Immunity Requirements)
  - EN61000-3-2/JEIDA (European and Japanese Harmonics Spec)
  - EN61000-3-3

China CCC Statement

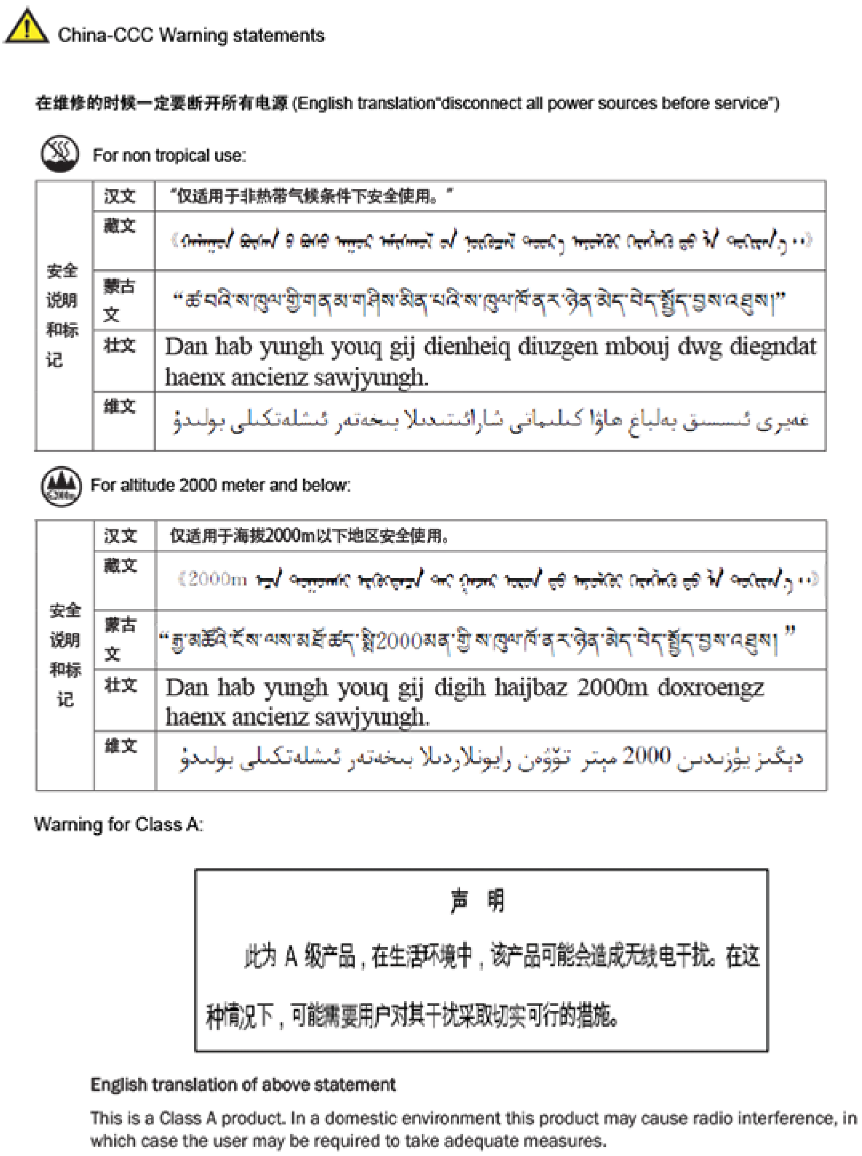

China-CCC Warning statements

在维修的时候一定要断开所有电源 (English translation"disconnect all power sources before service")

For non tropical use:

安全说明和标记	汉文	"仅适用于非热带气候条件下安全使用。"
	藏文	[illegible]
	蒙古文	"ཚ་བའི་ས་ཁུལ་གྱི་གནམ་གཤིས་མིན་པའི་ས་ཁུལ་ཁོ་ནར་ཉེན་མེད་བེད་སྤྱོད་བྱས་འཐུས།"
	壮文	Dan hab yungh youq gij dienheiq diuzgen mbouj dwg diegndat haenx ancienz sawjyungh.
	维文	غەيرى ئىسسىق بەلباغ ھاۋا كىلىماتى شارائىتىدىلا بىخەتەر ئىشلەتكىلى بولىدۇ

For altitude 2000 meter and below:

安全说明和标记	汉文	仅适用于海拔2000m以下地区安全使用。
	藏文	《2000m [illegible]》
	蒙古文	"རྒྱ་མཚོའི་ངོས་ལས་མཐོ་ཚད་སྨི2000མན་གྱི་ས་ཁུལ་ཁོ་ནར་ཉེན་མེད་བེད་སྤྱོད་བྱས་འཐུས། "
	壮文	Dan hab yungh youq gij digih haijbaz 2000m doxroengz haenx ancienz sawjyungh.
	维文	دېڭىز يۈزىدىن 2000 مېتر تۆۋەن رايونلاردىلا بىخەتەر ئىشلەتكىلى بولىدۇ

Warning for Class A:

声 明

此为 A 级产品，在生活环境中，该产品可能会造成无线电干扰。在这种情况下，可能需要用户对其干扰采取切实可行的措施。

English translation of above statement

This is a Class A product. In a domestic environment this product may cause radio interference, in which case the user may be required to take adequate measures.

China ROHS

China:

部件名称	有毒有害物质或元素					
	铅（Pb）	汞（Hg）	镉（Cd）	六价铬 (Cr (VI))	多溴联苯 （PBB）	多溴二苯醚 （PBDE）
光纤通道交换机 Fiber Channel Switch	×	O	O	O	O	O
IP 交换机 IP Switch	×	O	O	O	O	O
风扇/冷却组装件 Fan, Blower Assemblies	×	O	O	O	O	O
线路板部件 PCBA Cards	×	O	O	O	O	O
USB 闪存器 USB Flash Drive	×	O	O	O	O	O
电源 Power Supply Kit	×	O	O	O	O	O
光纤模块 SFP Optics	×	O	O	O	O	O

FCC Warning (U.S. Only)

This equipment has been tested and complies with the limits for a Class A computing device pursuant to Part 15 of the FCC rules. These limits are designed to provide reasonable protection against harmful interference when the equipment is operated in a commercial environment.

This equipment generates, uses, and can radiate radio frequency energy, and if not installed and used in accordance with the instruction manual, might cause harmful interference to radio communications. Operation of this equipment in a residential area is likely to cause harmful interference, in which case the user will be required to correct the interference at the user’s own expense.

Germany Statement

Machine noise information regulation – 3. GPSGV, the highest sound pressure level value is 70.0 dB(A) in accordance with EN ISO 7779.

Maschinenlärminformations-Verordnung – 3. GPSGV, der höchste Schalldruckpegel beträgt 70.0 dB(A) gemäss EN ISO 7779.

KCC Statement (Republic of Korea)

A급 기기 (업무용 방송통신기기): 이 기기는 업무용(A급)으로 전자파적합등록을 한 기기이오니 판매자 또는 사용자는 이 점을 주의하시기 바라며, 가정외의 지역에서 사용하는 것을 목적으로 합니다.

Class A device (Broadcasting Communication Device for Office Use): This device obtained EMC registration for office use (Class A), and may be used in places other than home. Sellers and/or users need to take note of this.

Taiwan ROHS Certification

限用物質含有情況標示聲明書

Declaration of the Presence Condition of the Restricted Substances Marking

證書號碼／受理編號：(No.)
Certificate No／Application No.
商品標籤及商品檢驗標識：(Picture)
Product Label and Commodity Inspection Mark.
樣張及其標示位置：(Description and Picture)
Sample and its location

設備名稱：光纖通道交換機
Equipment name

型號（型式） Brocade G620 (Brocade), HSTNM-N040 (HP),8960-F64/N64(IBM) 6415-1A1,6415-1B1,6415-HC1,6415-HC2(Lenovo), PS8600(inspur), Oceanstor SNS3664(Huawei)
Type designation (Type)

單元Unit	限用物質及其化學符號 Restricted substances and its chemical symbols					
	鉛Lead (Pb)	汞Mercury (Hg)	鎘Cadmium (Cd)	六價鉻 Hexavalent chromium (Cr^{+6})	多溴聯苯 Polybrominated biphenyls (PBB)	多溴二苯醚 Polybrominated diphenyl ethers (PBDE)
風扇冷卻組裝件 Fan, Blower Assemblies	–	○	○	○	○	○
PCBA卡 PCBA Card	–	○	○	○	○	○
USB快閃隨身碟 USB Flash Disc	–	○	○	○	○	○
電源套件 Power Supply Kit	–	○	○	○	○	○
SFP光模組 SFP Optics	–	○	○	○	○	○
鈑金 Sheet Metal	–	○	○	○	○	○
底盤裝置 Chassis Assembly	–	○	○	○	○	○
機械支架和滑道 Mechanical Brackets & Slides	–	○	○	○	○	○
插槽填充物 Slot Filler	–	○	○	○	○	○
電纜管理托盤 Cable Management Tray	–	○	○	○	○	○
電纜梳線器 Cable Comb	–	○	○	○	○	○
電纜和電源線 Cables	–	○	○	○	○	○
替換門 Replacement Doors	–	○	○	○	○	○

備考1. "超出0.1 wt %" 及 "超出0.01 wt %" 係指限用物質之百分比含量超出百分比含量基準值。
Note 1："Exceeding 0.1 wt %" and "exceeding 0.01 wt %" indicate that the percentage content of the restricted substance exceeds the reference percentage value of presence condition.

備考2. "○" 係指該項限用物質之百分比含量未超出百分比含量基準值。
Note 2："○" indicates that the percentage content of the restricted substance does not exceed the percentage of reference value of presence.

備考3. "－" 係指該項限用物質為排除項目。
Note 3：The "–" indicates that the restricted substance corresponds to the exemption.

VCCI Statement

この装置は、クラスA情報技術装置です。この装置を家庭環境で使用すると電波妨害を引き起こすことがあります。この場合には使用者が適切な対策を講ずるよう要求されることがあります。 VCCI－A

This is a Class A product based on the standard of the Voluntary Control Council for Interference by Information Technology Equipment (VCCI). If this equipment is used in a domestic environment, radio disturbance might arise. When such trouble occurs, the user might be required to take corrective actions.

Regulatory Compliance

Regulatory Compliance (EMC)

- 2014/30/EU
- AS/NZS CISPR 32 (Australia) (Class A)
- CISPR 32
- CNS 13438
- EN 55024
- EN 55032 (Class A)
- EN 55035
- EN 61000-3-2
- EN 61000-3-3
- FCC Part 15, Subpart B (Class A)
- GB 9254
- ICES-003 (Canada)
- KN 32
- KN 35
- VCCI-32 (Japan)

Regulatory Compliance (Safety)

- 2014/35/EU
- CAN/CSA-C22 No.62368-1
- EN/IEC 60950-1
- EN/IEC 62368-1
- EN/UL 60825
- EN/UL/CSA/IEC 60950-1
- GB 4943.1
- UL 62368-1

Regulatory Compliance (Environmental)

- 1907/2006 of the European Parliament and of the Council of 18 December 2006 concerning the Registration, Evaluation, Authorisation, and Restriction of Chemicals (EU REACH).
- 2006/66/EC – Batteries and accumulators and waste batteries and accumulators (EU battery directive).
- 2011/65/EU – Restriction of the use of certain hazardous substances in electrical and electronic equipment (EU RoHS).
- 2012/19/EU – Waste electrical and electronic equipment (EU WEEE).
- 30/2011/TT-BCT – Vietnam circular.
- 94/62/EC – Packaging and packaging waste (EU).
- Section 1502 of the Dodd-Frank Wall Street Reform and Consumer Protection Act of 2010 - U.S. Conflict Minerals.
- SJ/T 11363 – 2006 Requirements for Concentration Limits for Certain Hazardous Substances in EIPs (China).
- SJ/T 11364 – 2006 Marking for the Control of Pollution Caused by EIPs (China).

Cautions and Danger Notices

Cautions

A Caution statement alerts you to situations that can be potentially hazardous to you or cause damage to hardware, firmware, software, or data.

Ein Vorsichthinweis warnt Sie vor potenziellen Personengefahren oder Beschädigung der Hardware, Firmware, Software oder auch vor einem möglichen Datenverlust

Un message de mise en garde vous alerte sur des situations pouvant présenter un risque potentiel de dommages corporels ou de dommages matériels, logiciels ou de perte de données.

Un mensaje de precaución le alerta de situaciones que pueden resultar peligrosas para usted o causar daños en el hardware, el firmware, el software o los datos.

General Cautions

CAUTION
Changes or modifications made to this device that are not expressly approved by the party responsible for compliance could void the user's authority to operate the equipment.

VORSICHT	Falls dieses Gerät verändert oder modifiziert wird, ohne die ausdrückliche Genehmigung der für die Einhaltung der Anforderungen verantwortlichen Partei einzuholen, kann dem Benutzer der weitere Betrieb des Gerätes untersagt werden.
MISE EN GARDE	Les éventuelles modifications apportées à cet équipement sans avoir été expressément approuvées par la partie responsable d'en évaluer la conformité sont susceptibles d'annuler le droit de l'utilisateur à utiliser cet équipement.
PRECAUCIÓN	Si se realizan cambios o modificaciones en este dispositivo sin la autorización expresa de la parte responsable del cumplimiento de las normas, la licencia del usuario para operar este equipo puede quedar anulada.

CAUTION
Do not install the device in an environment where the operating ambient temperature might exceed 40°C (104°F).

VORSICHT	Das Gerät darf nicht in einer Umgebung mit einer Umgebungsbetriebstemperatur von über 40°C (104°F) installiert werden.
MISE EN GARDE	N'installez pas le dispositif dans un environnement où la température d'exploitation ambiante risque de dépasser 40°C (104°F).
PRECAUCIÓN	No instale el instrumento en un entorno en el que la temperatura ambiente de operación pueda exceder los 40°C (104°F).

CAUTION
Make sure the airflow around the front and back of the device is not restricted.

VORSICHT	Stellen Sie sicher, dass an der Vorderseite, den Seiten und an der Rückseite der Luftstrom nicht behindert wird.
MISE EN GARDE	Vérifiez que rien ne restreint la circulation d'air devant, derrière et sur les côtés du dispositif et qu'elle peut se faire librement.
PRECAUCIÓN	Asegúrese de que el flujo de aire en las inmediaciones de las partes anterior, laterales y posterior del instrumento no esté restringido.

Electrical Cautions

CAUTION
Before plugging a cable into any port, be sure to discharge the voltage stored on the cable by touching the electrical contacts to ground surface.

VORSICHT	Bevor Sie ein Kabel in einen Anschluss einstecken, entladen Sie jegliche im Kabel vorhandene elektrische Spannung, indem Sie mit den elektrischen Kontakten eine geerdete Oberfläche berühren.
MISE EN GARDE	Avant de brancher un câble à un port, assurez-vous de décharger la tension du câble en reliant les contacts électriques à la terre.
PRECAUCIÓN	Antes de conectar un cable en cualquier puerto, asegúrese de descargar la tensión acumulada en el cable tocando la superficie de conexión a tierra con los contactos eléctricos.

CAUTION
Static electricity can damage the chassis and other electronic devices. To avoid damage, keep static-sensitive devices in their static-protective packages until you are ready to install them.

VORSICHT	Statische Elektrizität kann das System und andere elektronische Geräte beschädigen. Um Schäden zu vermeiden, entnehmen Sie elektrostatisch empfindliche Geräte erst aus deren antistatischer Schutzhülle, wenn Sie bereit für den Einbau sind.
MISE EN GARDE	L'électricité statique peut endommager le châssis et les autres appareils électroniques. Pour éviter tout dommage, conservez les appareils sensibles à l'électricité statique dans leur emballage protecteur tant qu'ils n'ont pas été installés.
PRECAUCIÓN	La electricidad estática puede dañar el chasis y otros dispositivos electrónicos. A fin de impedir que se produzcan daños, conserve los dispositivos susceptibles de dañarse con la electricidad estática dentro de los paquetes protectores hasta que esté listo para instalarlos.

CAUTION
If you do not install a module or a power supply in a slot, you must keep the slot filler panel in place. If you run the chassis with an uncovered slot, the system will overheat.

VORSICHT	Falls kein Modul oder Netzteil im Steckplatz installiert wird, muss die Steckplatztafel angebracht werden. Wenn ein Steckplatz nicht abgedeckt wird, läuft das System heiß.
MISE EN GARDE	Si vous n’installez pas de module ou de bloc d'alimentation dans un slot, vous devez laisser le panneau du slot en place. Si vous faites fonctionner le châssis avec un slot découvert, le système surchauffera.
PRECAUCIÓN	Si no instala un módulo o un fuente de alimentación en la ranura, deberá mantener el panel de ranuras en su lugar. Si pone en funcionamiento el chasis con una ranura descubierta, el sistema sufrirá sobrecalentamiento.

CAUTION
Carefully follow the mechanical guides on each side of the power supply slot and make sure the power supply is properly inserted in the guides. Never insert the power supply upside down.

VORSICHT	Beachten Sie mechanischen Führungen an jeder Seite des Netzteils, das ordnungegemäß in die Führungen gesteckt werden muss. Das Netzteil darf niemals umgedreht eingesteckt werden.
MISE EN GARDE	Suivez attentivement les repères mécaniques de chaque côté du slot du bloc d'alimentation et assurez-vous que le bloc d'alimentation est bien inséré dans les repères. N'insérez jamais le bloc d'alimentation à l'envers.
PRECAUCIÓN	Siga cuidadosamente las guías mecánicas de cada lado de la ranura del suministro de energía y verifique que el suministro de energía está insertado correctamente en las guías. No inserte nunca el suministro de energía de manera invertida.

CAUTION
The power supply switch must be in the off position when you insert the power supply into the chassis. Damage to the switch can result if a live power supply is installed.

VORSICHT	Der Schalter des Netzteils muss in der Stellung „Aus“ stehen, wenn das Netzteil in das Gehäuse eingesetzt wird. Wenn ein spannungsführendes Netzteil (Schalterstellung "Ein") eingebaut wird, kann dies zu Beschädigungen am Switch führen.
MISE EN GARDE	Le commutateur d'alimentation doit être en position d'arrêt lorsque vous insérez la source d'alimentation dans le châssis. Si une source d'alimentation sous tension est installée, des dommages peuvent être causés.
PRECAUCIÓN	El interruptor de la fuente de alimentación debe estar en la posición de apagado en el momento de introducirla en el chasis. El conmutador puede resultar dañado si se instala una fuente de alimentación activa.

Danger Notices

General Dangers

DANGER
The procedures in this manual are for qualified service personnel.

GEFAHR	Die Vorgehensweisen in diesem Handbuch sind für qualifiziertes Servicepersonal bestimmt.
DANGER	Les procédures décrites dans ce manuel doivent être effectuées par un personnel de maintenance qualifié.
PELIGRO	Los procedimientos de este manual deben llevarlos a cabo técnicos cualificados.

DANGER
Be careful not to accidently insert your fingers into the fan tray while removing it from the chassis. The fan may still be spinning at a high speed.

GEFAHR	Die Finger dürfen nicht versehentlich in das Ventilatorblech gesteckt werden, wenn dieses vom Gehäuse abgenommen wird. Der Ventilator kann sich unter Umständen noch mit hoher Geschwindigkeit drehen.
DANGER	Faites attention de ne pas insérer vos doigts accidentellement dans le boîtier du ventilateur lorsque vous le retirez du châssis. Il est possible que le ventilateur tourne encore à grande vitesse.
PELIGRO	Procure no insertar los dedos accidentalmente en la bandeja del ventilador cuando esté desmontando el chasis. El ventilador podría estar girando a gran velocidad.

Electrical Dangers

DANGER
For safety reasons, the ESD wrist strap should contain a series 1 megaohm resistor.

GEFAHR	Aus Sicherheitsgründen sollte ein EGB-Armband zum Schutz von elektronischen gefährdeten Bauelementen mit einem 1 Megaohm-Reihenwiderstand ausgestattet sein.
DANGER	Pour des raisons de sécurité, la dragonne ESD doit contenir une résistance de série 1 méga ohm.
PELIGRO	Por razones de seguridad, la correa de muñeca ESD deberá contener un resistor en serie de 1 mega ohmio.

DANGER
Make sure that the power source circuits are properly grounded, and then use the power cord supplied with the device to connect it to the power source.

GEFAHR	Stellen Sie sicher, dass die Stromkreise ordnungsgemäß geerdet sind. Benutzen Sie dann das mit dem Gerät gelieferte Stromkabel, um es an die Srromquelle anzuschließen.
DANGER	Vérifiez que les circuits de sources d'alimentation sont bien mis à la terre, puis utilisez lecordon d'alimentation fourni avec le dispositif pour le connecter à la source d'alimentation.
PELIGRO	Verifique que circuitos de la fuente de corriente están conectados a tierra correctamente; luego use el cordón de potencia suministrado con el instrumento para conectarlo a la fuente de corriente

DANGER
Remove both power cords before servicing.

GEFAHR	Trennen Sie beide Netzkabel, bevor Sie Wartungsarbeiten durchführen.
DANGER	Retirez les deux cordons d'alimentation avant toute maintenance.
PELIGRO	Desconecte ambos cables de alimentación antes de realizar reparaciones.

DANGER
Disconnect the power cord from all power sources to completely remove power from the device.

GEFAHR	Ziehen Sie das Stromkabel aus allen Stromquellen, um sicherzustellen, dass dem Gerät kein Strom zugeführt wird.
DANGER	Débranchez le cordon d'alimentation de toutes les sources d'alimentation pour couper complètement l'alimentation du dispositif.
PELIGRO	Para desconectar completamente la corriente del instrumento, desconecte el cordón de corriente de todas las fuentes de corriente.

DANGER
To avoid high voltage shock, do not open the device while the power is on.

GEFAHR	Das eingeschaltete Gerät darf nicht geöffnet werden, da andernfalls das Risiko eines Stromschlags mit Hochspannung besteht.
DANGER	Afin d'éviter tout choc électrique, n'ouvrez pas l'appareil lorsqu'il est sous tension.
PELIGRO	Para evitar una descarga de alto voltaje, no abra el dispositivo mientras esté encendido.

DANGER
Batteries used for RTC/NVRAM backup are not located in operator-access areas. There is a risk of explosion if a battery is replaced by an incorrect type. Dispose of used components with batteries according to local ordinance and regulations.

GEFAHR	Die für die RTC/NVRAM-Sicherung verwendeten Batterien, befinden sich nicht in für den Bediener zugänglichen Bereichen. Bei Ersetzen der Batterie durch einen falschen Typ besteht Explosionsgefahr. Entsorgen Sie gebrauchte Komponenten mit Batterien gemäß den lokalen Auflagen und Vorschriften.
DANGER	Les batteries utilisées pour la sauvegarde de l'horloge et de la mémoire ne sont pas remplaçables par l'opérateur. Il y a risque d'explosion si la batterie est remplacée par une d'un type incompatible. Jetez/recyclez les batteries conformément aux normes locales.

PELIGRO	Las baterías usadas para respaldo de RTC/NVRAM no se encuentran en areas de acceso del operador. Existe riesgo de explosión si una batería es remplazada por un tipo incorrecto. Deshágase de los componentes usados con las baterías según las politicas y regulaciones locales.

Dangers Related to Equipment Weight

DANGER
Make sure the rack housing the device is adequately secured to prevent it from becoming unstable or falling over.

GEFAHR	Stellen Sie sicher, dass das Gestell für die Unterbringung des Geräts auf angemessene Weise gesichert ist, so dass das Gestell oder der Schrank nicht wackeln oder umfallen kann.
DANGER	Vérifiez que le bâti abritant le dispositif est bien fixé afin qu'il ne devienne pas instable ou qu'il ne risque pas de tomber.
PELIGRO	Verifique que el bastidor que alberga el instrumento está asegurado correctamente para evitar que pueda hacerse inestable o que caiga.

Laser Dangers

DANGER
All fiber-optic interfaces use Class 1 lasers.

GEFAHR	Alle Glasfaser-Schnittstellen verwenden Laser der Klasse 1.
DANGER	Toutes les interfaces en fibre optique utilisent des lasers de classe 1.
PELIGRO	Todas las interfaces de fibra óptica utilizan láser de clase 1.

DANGER
Use only optical transceivers that are qualified by Broadcom and comply with the FDA Class 1 radiation performance requirements defined in 21 CFR Subchapter I, and with IEC 60825 and EN60825. Optical products that do not comply with these standards might emit light that is hazardous to the eyes.

GEFAHR	Verwenden Sie nur optische Transceiver, die von Broadcom und die die Anforderungen gemäß FDA Class 1 Radiation Performance Standards in 21 CFR, Unterkapitel I, sowie IEC 60825 und EN60825 erfüllen. Optische Produkte, die diese Normen nicht erfüllen, können Strahlen aussenden, die für das menschliche Auge gefährlich sind.
DANGER	Utilisez uniquement des émetteurs-récepteurs optiques certifiés par Broadcom et conformes aux exigences sur la puissance de rayonnement de catégorie 1 de la FDA définies au sous-chapitre 21 CFR I et à les normes IEC 60825 et EN60825. Les produits optiques non-conformes à ces normes sont susceptibles d'émettre une lumière dangereuse pour les yeux.
PELIGRO	Utilice sólo transceptores ópticos aprobados por Broadcom y que cumplan con las normas IEC 60825 y EN60825, y con los estándares de rendimiento Clase 1 de FDA definidos en el subcapítulo I de 21 CFR. Los productos ópticos que no cumplan con estos estándares pueden emitir luz dañina para los ojos.

Revision History

53-1003990-20; 19 April 2021

Made editorial and stylistic revisions.

53-1003990-19; 18 December 2020

- Updated the Supported Hardware and Software section.
- Updated the Nonport-Side View section.
- Updated the Power Supply and Fan Assembly Overview section.
- Updated the Power Supply and Fan Assembly Task Guide section.
- Updated the Recording Critical Information about the Power Supply and Fan Assembly section.
- Updated the Removing a Power Supply and Fan Assembly section.
- Updated the Inserting a New Power Supply and Fan Assembly section.
- Added the Connecting an AC Power Cord section.
- Added the Connecting a DC Power Cord to a 250W DC Power Supply section.
- Added the Replacing the Power Supply and Fan Assembly section.
- Added the Brocade G620 Switch Technical Specifications chapter.
- Added the Regulatory Compliance section.

53-1003990-18; 30 April 2020

- The "slant nose" aspect of the chassis has been removed.
- One LED now indicates SFP port status. The QSFP LED flashes 1 through 4 times to indicate whether the focus is on port 0 (1 flash), port 1 (2 flashes), port 2 (3 flashes), or port 3 (4 flashes).
- A mini-USB port (commonly called the serial console port) is now included in the shipment.

53-1003990-17; 8 August 2019

Corrected the China ROHS regulatory statement.

53-1003990-16; 29 March 2019

Incorporated more generic rack mount images.

53-1003990-15; 13 February 2019

Included "Interpreting Nonport-Side LEDs" as this section was inadvertently removed in the last version of this guide.

53-1003990-14; 4 December 2018

Editorial and stylistic changes.

Added a note to Shipping Carton Contents that transceivers may be shipped in an accessory tray instead of installed in switch ports.

In Technical Specifications, under "Memory Specifications," changed the following:

- Main memory size that is changed to 2 GB, 64-bit.
- Flash memory size that is changed to 16 MB.

53-1003990-13; 20 September 2018

Made revisions throughout the document to provide only information on the supported AC power supplies.

53-1003990-12; 18 July 2018

- Revised the illustration of the 10-32 retainer nut in "Parts" in Installing a Universal Four-Post Rack Kit on page 22.
- Revised procedures to power down the switch in Powering Down the Device on page 53.
- Added information and the workaround for 16G QSFPs negotiating the link speed to 8G when connecting a breakout cable in Replacing a QSFP Transceiver on page 59.
- Added Management Port LEDs on page 63.

53-1003990-11; 10 April 2018

- Modified the reference for finding more information on qualified transceivers, added the danger statement on optical transceivers, and modified the note for the optical transceiver extraction tool in Time and Items Required on page 57.
- Generalized all references to the management Ethernet port to a standard "1000/100/10 Mbps" port.

BROADCOM®